The University of Osaka
Institutional Knowledge Archive

Title	On simply knotted spheres in R^4
Author(s)	Yajima, Takeshi
Citation	Osaka Journal of Mathematics. 1964, 1(2), p. 133-152
Version Type	VoR
URL	https://doi.org/10.18910/10284
rights	
Note	

The University of Osaka Institutional Knowledge Archive : OUKA

https://ir.library.osaka-u.ac.jp/

The University of Osaka

Yajima, T.
Osaka J. Math.
1 (1964), 133-152

ON SIMPLY KNOTTED SPHERES IN R^4

Dedicated to Professor H. Terasaka on his 60-th birthday

TAKESHI YAJIMA

(Received September 30, 1964)

1. Introduction

Let S be a 2-sphere in the 4-dimensional Euclidean space R^4, and let S^* be the projection of S on a 3-dimensional subspace. It is obvious that the singularity of S^* consists of several closed curves under appropriate conditions. A simplest case of the projection may be such a case that the singularity of S^* consists of several disjoint simple closed curves. We call such a projection a simple projection. Now, is it possible to give a projection of every 2-sphere in R^4 as a simple projection on some 3-subspace?

It is the purpose of this paper to prove that there exist some kinds of locally flat 2-spheres, each sphere of which can not be deformed so that it has a simple projection. For this purpose we consider two kinds of spheres, simply knotted spheres and symmetric ribbon sheres, and prove that these kinds of spheres coincide. Spheres of the former are defined as equivalent classes of spheres, each of which contains a sphere S such that its projection S^* on some 3-subspace is a simple projection, and spheres of the latter are known[1] as a simple case of knotted 2-spheres in R^4.

The sphere used in the proof is the one discovered by R. H. Fox[2], and a slight modification of H. Terasaka's result [8] enable us to prove that the Fox's sphere is distinct from a symmetric ribbon sphere.

2. Preliminaries

In this section we shall state some fundamental concepts and terminologies, most of which were explained in [10], concerning the projection method for the knot theory in the 4-space. Throughout this paper terminologies are used in the semi-linear point of view.

1) [7], p. 135, Example 10, 11 and [10], p. 70, Example 1, 2.
2) [7], p. 136, Example 12.

Let R^4 be the 4-dimensional Euclidean space with a coordinate system (x, y, z, u). The 3-dimensional subspace of R^4 defined by $u=0$ is denoted by R^3. The half spaces of R^4 defined by $u \geqq 0$ or $u \leqq 0$ are denoted by H_+^4 or H_-^4 respectively. With every point $P=(x, y, z, u)$ of R^4, we associate the point $P^*=(x, y, z, 0)$ and the coordinate $u=u(P)$. We call P^* the *trace* or the *projection* of P, and u the *height* of P respectively. The mapping $\pi: P \to P^*$ is called the *projection* as usual.

Let M be a 2-dimensional manifold in R^4 with or without boundaries. There is no loss of generality to assume the following condition:

(2.1) *If $P_1, \cdots, P_m$ are vertices of M, then the system of points $(P_1^*, \cdots, P_m^*)$ is in general position in R^3.*

It is natural to denote the set of traces of points of M by M^*. In virtue of (2.1), we can suppose that the set of *cutting points* of M^*, that is, the set of points of intersections of different 2-simplexes of M^*, constitutes a 1-dimensional complex. We denote the set of cutting points of M^* by $\Gamma(M^*)$.

We can also assume the following conditions:

(2.2) *A segment of $\Gamma(M^*)$ is the intersection of just two 2-simplexes.*

(2.3) *There exist just three 2-simplexes through a double point of $\Gamma(M^*)$.*

From the same argument as in Fig. 1 of [10], we can suppose that:

(2.4) *$\Gamma(M^*)$ consists of the following three kinds of polygons,*

(1) *closed polygons,*

(2) *polygonal arcs, whose endpoints belong to the projection of boundaries of M,*

(3) *polygonal arcs, whose endpoints contain some singular cutting points.*

The definition of *singular cutting points* was stated in [10], but we do not need the definition in this paper.

Let γ^* be a cutting of $\Gamma(M^*)$, namely a polygon of a kind of (1) or (2), and γ_1, γ_2 be inverse images of γ^* on S by the projection. If $u(P_1)>u(P_2)$ for some points $P_1 \in \gamma_1$, $P_2 \in \gamma_2$ such that $P_1^*=P_2^*$, then it is obvious that $u(Q_1)>u(Q_2)$ for every pair of points $Q_1 \in \gamma_1$, $Q_2 \in \gamma_2$ such that $Q_1^*=Q_2^*$. We denote this situation simply by $u(\gamma_1)>u(\gamma_2)$.

The terminology of cutting is used sometimes for a continuous image of a 2-manifold under the same conditions as (2.1), (2.2) and (2.3).

The presentation of the knot group $\mathfrak{F}(M)$ in the projection method is as follows. Let $\Sigma_1^*, \cdots, \Sigma_k^*$ be components of $M^*-\Gamma(M^*)$, where M is an arbitrary 2-dimensional closed manifold in R^4. Let γ^* be the

intersection of two surfaces $A_i^* = \overline{\Sigma_i^* \cup \Sigma_{i+1}^*}$ and $A_j^* = \overline{\Sigma_j^* \cup \Sigma_{j+1}^*}$ (Fig. 1), and γ_i, γ_j be the inverse images of γ^* on A_i and A_j respectively. If $u(\gamma_i) < u(\gamma_j)$ then we call A_i the *under surface* and A_j the *over surface* respectively.

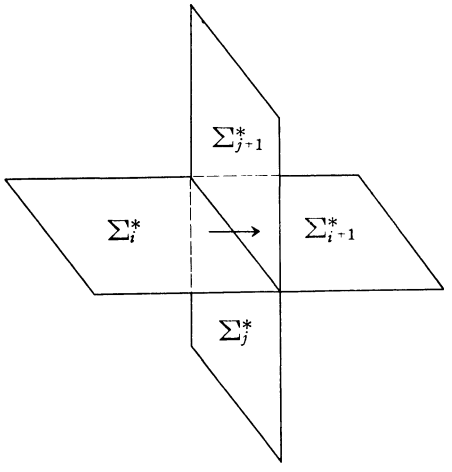

Fig. 1.

We use the notation in Fig. 1 to represent the relation between the heights of two surfaces, where the small vector on the under surface indicates the orientation of the over surface.

According to the results of [10] we have the presentation of $\mathfrak{F}(M)$, with generators σ_i corresponding to each Σ_i^* $(i=1, \cdots, k)$, as follows:

Generators: $(\sigma_1, \cdots, \sigma_k)$

Defining relations: $\sigma_{j+1} = \sigma_j$, $\sigma_{i+1} = \sigma_j \sigma_i \sigma_j^{-1}$

for each γ^*, where $\overline{\Sigma_j \cup \Sigma_{j+1}}$ is the over surface and the orientation vector points from Σ_i^* to Σ_{i+1}^*.

3. Symmetric ribbon spheres

First of all we shall state the definition of ribbons. Let D_0 be the unit disk $x^2+y^2 \leqq 1$, and let f be a continuous mapping of D_0 into R^3. Put $D^* = f(D_0)$. Let γ^* be a simple arc of $\Gamma(D^*)$, which is of the kind of (2.4), (2), and is separated from the rest of $\Gamma(D^*)$. Then there happen following two cases (Fig. 2):

(a) $f^{-1}(\gamma^*)$ consists of two arcs on D_0 such that the endpoints of one of them belong to the boundary of D_0, and those of the other do not.

(b) $f^{-1}(\gamma^*)$ consists of two arcs on D_0 such that one of the endpoints of each arcs belongs to the boundary of D_0, and the others do not.

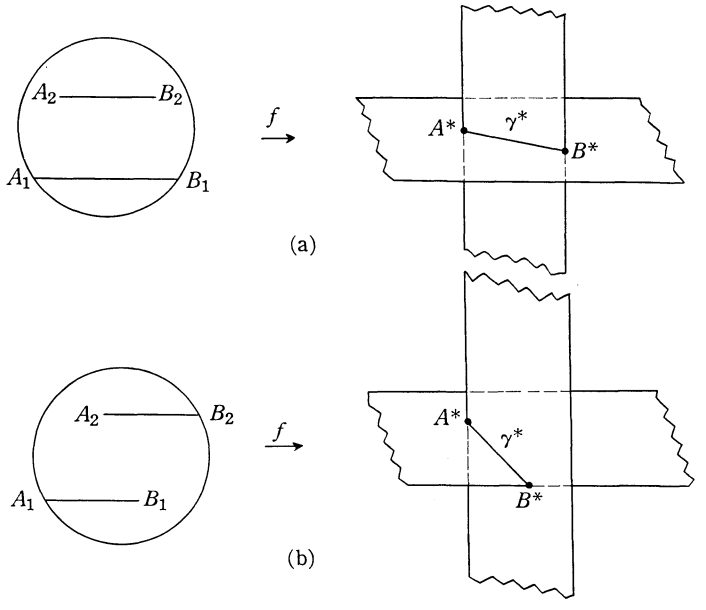

Fig. 2.

A *ribbon* $\mathfrak{r}$ is defined as a continuous image of D_0 in R^3 such that $\Gamma(\mathfrak{r})$ consists of several disjoint simple arcs which are of the kind (a).

(3.1) *Let* $\mathfrak{r}$ *be a ribbon. There exist disks* $D_+(\mathfrak{r})\subset H^4_+$ *and* $D_-(\mathfrak{r})\subset H^4_-$ *such that their boundaries are contained in* R^3 *and* $D^*_+(\mathfrak{r})=D^*_-(\mathfrak{r})=\mathfrak{r}$.

Proof. First of all we shall construct $D_+(\mathfrak{r})$. Let $\gamma^*_1, \cdots, \gamma^*_n$ be cuttings of $\Gamma(\mathfrak{r})$ and let $\gamma^1_\nu, \gamma^2_\nu$ $(\nu=1, \cdots, n)$ be the inverse image of γ^*_ν, where the endpoints of γ^1_ν's are on the boundary of D_0. Suppose $P^1_\nu \in \gamma^1_\nu$, $P^2_\nu \ni \gamma^2_\nu$ be the inverse image of the variable point P^*_ν on γ^*_ν. Let u be a continuous function defined on $\sum \gamma^1_\nu \cup \sum \gamma^2_\nu \cup Bd\, D_0$ such that

(i) if P^*_ν is an endpoint of γ^*_ν, then $u(P^1_\nu)=0$, $u(P^2_\nu)>0$,

(ii) if $P^*_\nu \in \gamma^*_\nu$ is not an endpoint of γ^*_ν, then $0<u(P^1_\nu)<u(P^2_\nu)$,

(iii) if $P^* \in Bd\, \mathfrak{r}-\sum \gamma^*_\nu$, then $u(P)=0$.

We can extend the function u onto D_0 such that u is continuous on D_0.

It is obvious that the correspondence

$$h: P \to (P^*, u(P)), \qquad P \in D_0$$

forms a homeomorphic mapping of D_0 into R^4. Hence $D_+(\mathfrak{r})=h(D_0)$ is a required disk.

For the construction of $D_-(\mathfrak{r})$ it is sufficient to replace the conditions (i), (ii) by the following conditions:

(i′) if P_ν^* is an endpoint of γ_ν^*, then $u(P_\nu^1)=0$, $u(P_\nu^2)<0$,

(ii′) if $P_\nu^* \in \gamma_\nu^*$ is not an endpoint of γ_ν^*, then $0>u(P_\nu^1)>u(P_\nu^2)$.

It is obvious that:

(3.2) *There exists a unique equivalent class of spheres which contains the sphere* $S(\mathfrak{r})=D_+(\mathfrak{r})\cup D_-(\mathfrak{r})$ *for a given ribbon* $\mathfrak{r}$.

We call this equivalent class of spheres the *symmetric ribbon sphere* of $\mathfrak{r}$.

It is easy to get the projection S^* from an arbitrarily given ribbon $\mathfrak{r}$. Let γ_i^* be a cutting of $\mathfrak{r}$, and let A^*, B^* be parts of $\mathfrak{r}$ which contain γ_i^*, where B^* runs through A^*. Thicken $\mathfrak{r}$ to a singular cube K^*, so that the ribbon knot k of $\mathfrak{r}$ separates the surface S^* of K^* into two singular disks, one of which corresponds to $D_+^*(\mathfrak{r})$ and the other to $D_-^*(\mathfrak{r})$. Let A_+^*, B_+^* be the corresponding parts of A^*, B^* in $D_+^*(\mathfrak{r})$ and let A_-^*, B_-^* be the parts in $D_-^*(\mathfrak{r})$. Then the cutting γ_i^* becomes to closed cuttings $\gamma_{i1}^*=A_-^*\cap(B_+^*\cup B_-^*)$ and $\gamma_{i2}^*=A_+^*\cap(B_+^*\cup B_-^*)$. By these cuttings the tube $B_+^*\cup B_-^*$ splits into three parts of tubes T_1^*, T_0^*, T_2^*, and new disks C_+^* and C_-^* appear on A_+^* and A_-^* respectively (Fig. 3).

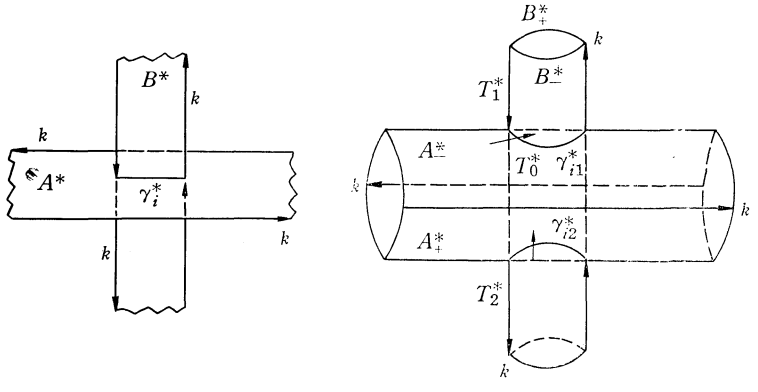

Fig. 3.

It is easily seen that $T_0^*\cup T_1^*$ is the over surface at γ_{i1}^* and that $T_0^*\cup T_2^*$ is the under surface at γ_{i2}^*. Hereafter we say that A and B have the *opposite relations in heights* at γ_{i1}^* and γ_{i2}^*. If we suppose that the orientation of $D_+^*(\mathfrak{r})$ coincides with that of k, then we have essential generators σ_A, σ_{B_1}, σ_{B_2} and the relation $\sigma_{B_1}=\sigma_A\sigma_{B_2}\sigma_A^{-1}$, where σ_A, σ_{B_1} and σ_{B_2} correspond to the surfaces $A_+^*\cup A_-^*$, $T_1^*\cup T_0^*$ and T_2^* respectively.

EXAMPLE 1. Let $\mathfrak{r}_1$ be a ribbon in Fig. 4, (a). The ribbon knot k_1 of $\mathfrak{r}_1$ is known as *the square knot*. The corresponding symmetric ribbon sphere S_1^* is shown in (b).

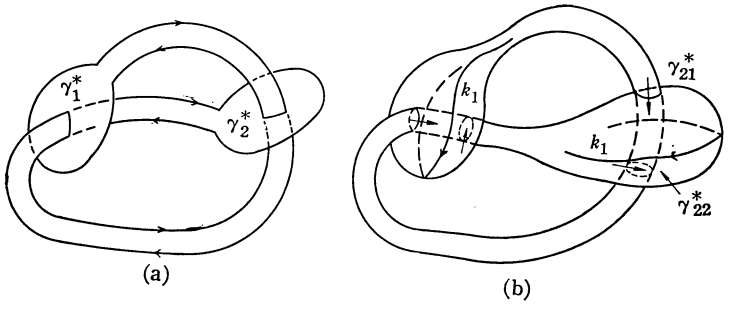

Fig. 4.

EXAMPLE 2. Let $\mathfrak{r}_2$ be a ribbon in Fig. 5, (a). The ribbon knot k_2 of $\mathfrak{r}_2$ is known as *the stevedore's knot.*

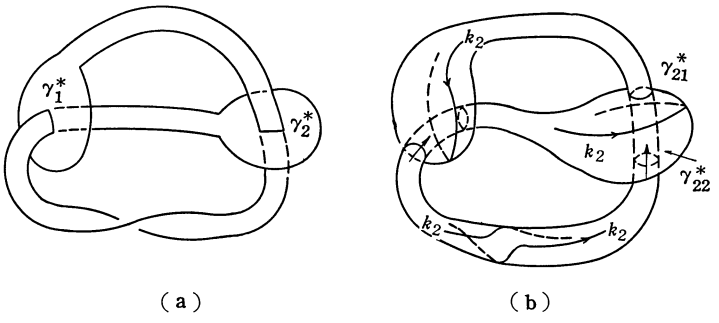

Fig. 5.

Since the stripe connecting two disks in (a) is twisted, we have the sphere in (b) exchanging the relations of heights between γ_{21}^* and γ_{22}^* in Fig. 4, (b).

4. Simply knotted spheres

Let S be a sphere in R^4 such that $\Gamma(S^*)$ consists of several disjoint simple closed curves $\gamma_1^*, \cdots, \gamma_n^*$. We call such a projection S^* a simple projection. An equivalent class of spheres which contains the sphere S is called a *simply knotted sphere.* It is obvious that a symmetric ribbon sphere is a simply knotted sphere. We shall prove in this section that every simply knotted sphere is equivalent to a symmetric ribbon sphere.

(4.1) γ_ν^* $(\nu=1, \cdots, n)$ *is a trivial knot in* R^3.

Proof. Let $\mathfrak{S}$ be the unit sphere $x^2+y^2+z^2=1$, and let h be a homeomorphism of $\mathfrak{S}$ onto S. Put $f=\pi h$. Then $f^{-1}(\gamma_\nu^*)$ consists of two disjoint circles c_ν^1 and c_ν^2 on $\mathfrak{S}$. The circles c_ν^1 and c_ν^2 bound disks D_ν^1

and D_ν^2 respectively on $\mathfrak{S}$ such that $c_\nu^1 \cap D_\nu^2 = c_\nu^2 \cap D_\nu^1 = 0$. Therefore, γ_ν^* is the boundary of the singular disk $D_\nu^{1*} = f(D_\nu^1)$, where singularities of D_ν^{1*} do not exist on γ_ν^*. Hence we can suppose that γ_ν^* is the boundary of some non-singular disk by Deh's Lemma[3]. Therefore γ_ν^* is trivial. We call D_ν^k $(k=1, 2)$ the *interior of* c_ν^k.

(4.2) *γ_ν^* and γ_μ^* do not link homotopically for $\nu \neq \mu$.*

Proof. Let $f^{-1}(\gamma_\nu^*) = c_\nu^1 \cup c_\nu^2$ and $f^{-1}(\gamma_\mu^*) = c_\mu^1 \cup c_\mu^2$. Let c_ν^1 be an innermost one in these circles. Suppose that γ_ν^* links homotopically with γ_μ^*. Then we have $f(D_\nu^1) \cap \gamma_\mu^* \neq 0$. Therefore γ_μ^* is not a simple closed curve. This contradicts the assumption.

Let d_ν be a parallel curve to c_ν^k sufficiently near to c_ν^k on $\mathfrak{S}$. We can prove easily as above that $f(d_\nu)$ and $\gamma_\nu^* = f(c_\nu^k)$ do not link homotopically. Therefore, we have the following statement.

(4.3) *A ring-neighbourhood of c_ν^k, which does not contain another inverse image of $\Gamma(S^*)$, is mapped by f onto a topological non-twisted ring surface in R^3.*

Now γ_ν^*'s are classified as follows:

(1) Both c_ν^k $(k=1, 2)$ are innermost in the circles of the inverse image of $\Gamma(S^*)$.

(2) One of c_ν^k $(k=1, 2)$ is innermost and the other is not.

(3) Both c_ν^k are not innermost.

If γ_ν^* is a sort of (2), we call it a *canonical cutting.*

(4.4) *If both c_ν^k $(k=1, 2)$ are innermost, then γ_ν^* can be cancelled by a deformation of S in R^4.*

Proof. Since D_ν^1 and D_ν^2 do not contain the other circles of $f^{-1}(\Gamma(S^*))$, they are mapped onto non-singular disks $D_\nu^{1*} = f(D_\nu^1)$ and $D_\nu^{2*} = f(D_\nu^2)$ respectively such that $D_\nu^{1*} \cap D_\nu^{2*} = \gamma_\nu^*$. Let $\gamma_\nu^1 = h(c_\nu^1)$ and $\gamma_\nu^2 = h(c_\nu^2)$. Suppose that $u(\gamma_\nu^2) < u(\gamma_\nu^1)$. In the first step, we deform a neighbourhood of $h(D_\nu^2)$, so that the height of every point of $h(D_\nu^2)$ is less than those of points of $f(D_\nu^1)$. During this deformation, S^* is fixed. In the second step, we deform $h(D_\nu^2)$ parallel to R^3, so that γ_1^* may be cancelled. During the deformation of the second step $h(D_\nu^2)$ does not meet $h(D_\nu^1)$.

(4.5) *Let S be a simply knotted sphere. We can deform S into S', so that $\Gamma(S'^*)$ consists of canonical cuttings.*

Proof. In virtue of (4.4) we can suppose that $\Gamma(S^*)$ consists of cuttings of (2) and (3). We shall prove by induction that non-canonical cuttings (3) can be replaced by a finite number of canonical cuttings (2).

3) [4], p. 1 or [5], p. 223, theorem 1.

Let $\gamma^*_{\nu_1}, \cdots \gamma^*_{\nu_m}$ be non-canonical cuttings of S^* in the kind of (3), and let $c^1_{\nu_1}, c^2_{\nu_1}; \cdots; c^1_{\nu_m}, c^2_{\nu_m}$ be the circles of $f^{-1}(\gamma^*_{\nu_i})$ $(i=1, \cdots, m)$. Suppose that $c^1_{\nu_1}$ is an innermost one of these circles. We shall construct, in the first step, a deformation of S^* in R^3, so that $\gamma^*_{\nu_1}$ may be replaced by canonical cuttings.

Let E_1, E_2 be ring-neighbourhoods of $c^1_{\nu_1}, c^2_{\nu_1}$ respectively, such that each E_k $(k=1, 2)$ contains only the circle c^k_ν. In virtue of (4.3) we can suppose that $E^*_1=f(E_1)$ is a ring surface on (x, y)-plane and $E^*_2=f(E_2)$ is a cylinder which is perpendicular to E^*_1. Suppose that $D^{1*}_{\nu_1}$ continues to the inside of the ring surface E^*_1.

The synopsis of the required deformation is illustrated in Fig. 6.

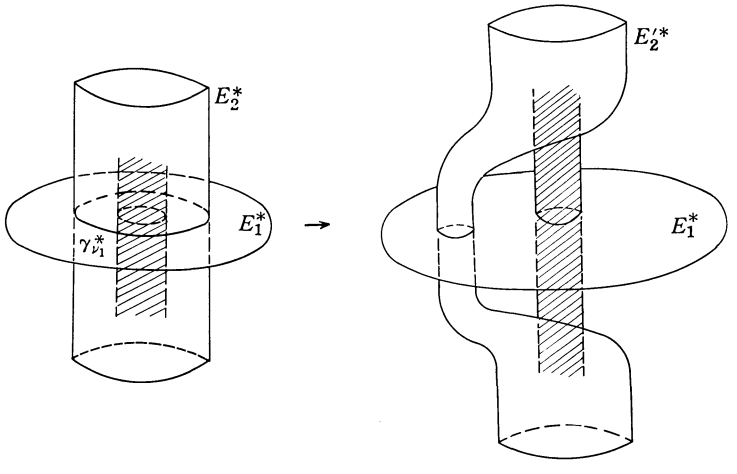

Fig. 6.

The shadowed part indicates that there exist some other parts of S^*. If was can prove that the intersection of the deformed cylinder E'^*_2 with the shadowed part consists of canonical cuttings, then the proof is complete. The detailed proof in the question is as follows (Fig. 7).

Let C be a component of $D^1_{\nu_1}-f^{-1}(\Gamma(S^*))$ such that $c^1_{\nu_1}$ may be a member of boundaries of C. Let $c^1_{\mu_1}, \cdots, c^1_{\mu_l}; c^2_{\tau_1}, \cdots, c^2_{\tau_k}$ be the rest of boundaries of C, where $c^1_{\mu_i}$'s are innermost circles of $f^{-1}(\Gamma(S^*))$ and $c^2_{\tau_j}$'s are not. For each $c^2_{\tau_j}$ we take a parallel curve $d^2_{\tau_j}$ to $c^2_{\tau_j}$ on C. If we replace all $c^2_{\tau_j}$'s by $d^2_{\tau_j}$'s, then we have a domain C_1 contained in C. Since $\gamma^*_{\tau_j}$ is canonical, there exists a non-singular disk $A^*_{\tau_j}$, which is parallel to $D^{1*}_{\tau_j}=f(D^1_{\tau_j})$ and $Bd\, A^*_{\tau_j}=f(d^2_{\tau_j})$. Thus we have a disk $B^*_{\nu_1}=C^*_1 \cup \sum D^{1*}_\mu \cup \sum A^*_{\tau_j}$ such that $B^*_{\nu_1} \cap (S-B_{\nu_1})^*$ consists of innermost circles on $B^*_{\nu_1}$.

Let $B^{1*}_{\nu_1}$ and $B^{2*}_{\nu_1}$ be two parallel surfaces to $B^*_{\nu_1}$ illustrated as

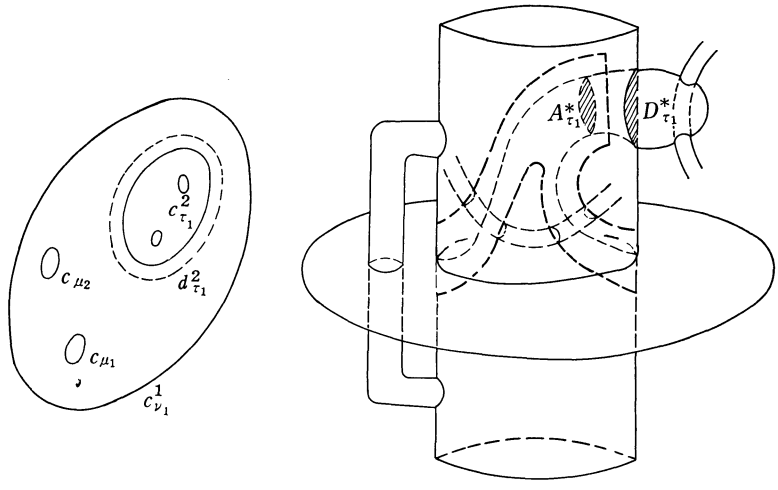

Fig. 7.

broken lines in Fig. 7. The disks $B^{1*}_{\nu_1}$ and $B^{2*}_{\nu_1}$ divide the cylinder E^*_2 into three subcylinders E^{1*}_2, E^{0*}_1 and E^{2*}_2, where $B^{1*}_{\nu_1}$ and $B^{2*}_{\nu_1}$ are bounding disks of E^{1*}_2 and E^{2*}_2 respectively. Perforate the subcylinders E^{1*}_2 and E^{2*}_2 into $\tilde{E}^{1*}_2$ and $\tilde{E}^2_2$ respectively, and connect these holes by a tube T^*. Then we have the required cylinder $E'^*_2=(\tilde{E}^{1*}_2 \cup B^{1*}_{\nu_1}) \cup (\tilde{E}^{2*}_2 \cup B^{2*}_{\nu_1}) \cup T^*$. Thus the question is solved.

In the last step of the proof, we shall show that the deformation in R^3 defined above is admissible as the projection of a deformation of S in R^4. It will be done very simply. Suppse that $u(E_1)>u(E_2)$. Deform $h(E_2)$, so that the height of every point of E^0_2 is less than that of the points of $S-h(E^0_2)$. Then we can deform $h(E^0_2)$ parallel to R^3 freely from the other part of S. Thus, we have completed the proof.

Let S be a simply knotted sphere such that $\Gamma(S^*)$ consists of canonical cuttings $\gamma^*_1, \cdots, \gamma^*_n$. Suppose that $c^1_1, \cdots, c^1_n; c^2_1, \cdots, c^2_n$ are circles of $f^{-1}(\Gamma(S^*))$ on $\mathfrak{S}$, where $f^{-1}(\gamma^*_\nu)=c^1_\nu \cup c^2_\nu$ $(\nu=1, \cdots, n)$ and c^1_ν's are innermost on $\mathfrak{S}$. Hereafter we call c^1_ν's circles of *the first kind*, and c^2_ν's are those of *the second kind*. Let $C_0, \cdots, C_n$ be the components of $\mathfrak{S}-\sum c^2_\nu$. Then each C_σ $(\sigma=0, 1, \cdots, n)$ is mapped homeomorphically in R^3, but it may happen that $\bar{C}_\sigma$ is mapped not homeomorphically for some σ. A cutting γ^*_ν, such that c^1_ν and c^2_ν are contained in some $\bar{C}_\sigma$, is called a *self-cutting* of $\bar{C}^*_\sigma$.

Let $c^2_{\nu_1}, \cdots, c^2_{\nu_k}$ be the bonding circles of C_σ. If $\bar{C}^*_\sigma$ contains no self-cutting, then it is obvious that $M_\sigma=\bar{C}_\sigma \cup D^1_{\nu_1} \cup \cdots \cup D^1_{\nu_k}$ is mapped into a sphere in R^3, where $D^1_{\nu_i}$'s are the same as (4. 1). Therefore, the sphere

M_σ^* separates R^3 into two parts. However, even in the case when $\bar{C}_\sigma^*$ contains some self-cuttings, it is valid that M_σ^* separates R^3 into the exterior and the interior of it.

(4.6) *Every simply knotted sphere S can be deformed into a sphere S', so that if the interior of M_σ^* of S'^* contains some C_τ^*'s, then these C_τ^*'s are mutually disjoint tubes and the relation of heights at two terminal cuttings of a tube are mutually opposite for each τ.*

Proof. In virtue of (4.5), we can suppose that $\Gamma(S^*)$ consists of canonical cuttings. Let C_σ, M_σ be as above. Let N^* be a component of $S^*-M_\sigma^*$ contained in the interior of M_σ^*. If all the vectors indicating the relations of heights at the cuttings of $\bar{N}^*\cap M_\sigma^*$ are either on N^* or on M_σ^*, then it is obvious that N^* can be pulled out to the exterior of M_σ^* and the cuttings of $\bar{N}^*\cap M_\sigma^*$ are cancelled. If $\bar{N}^*\cap M_\sigma^*$ consists of more than two cuttings, and vectors of the relation of heights exist both on N^* and M_σ^*, then take a sphere S_N^* inside of M_σ^* such that the interior of S_N^* contains only the cuttings on N^*, and pull out the interior of S_N^* to the exterior of M_σ^*. The deformation in R^4 corresponding to the pulling out of N^* may take place over or under $h(C_\sigma)$. In consequence of this deformation the remaining part of N^* in the interior of M_σ^* splits into the same number of tubes as the number of cuttings of $\bar{N}^*\cap M_\sigma^*$. Moreover, some of these tubes, each of which has the same relations of heights at the terminal cuttings, can be pulled out cancelling these cuttings. By repeating the above processes, we can get a spheres S' which satisfies the required conditions. Thus we have completed the proof.

Each C_σ^* has the orientation induced from that of S. According as the vector indicating the orientation of C_σ^* points to the inside or to the outside of M_σ^*, we say that C_σ^* is in the *positive* or in the *negative situation* respectively.

Now let us observe self-cuttings. Let c_1^2 be an innermost one between the circles of the second kind, and let C_0, C_1 be the components of $\mathfrak{S}-\sum c_\nu^2$, such that $\bar{C}_0\cap\bar{C}_1=c_1^2$, $Bd\,C_0=c_1^2$. Suppose that c_1^1 is contained in C_0. Obviously $\overline{C_0-D_1^1}$ is mapped onto a torus in R^3. According to the situation of γ_1^* on the torus, there exist two cases (α) and (β), where γ_1^* in (α) is homotopic to a longitude of the torus and that in (β) is homotopic to a meridian. Obviously C_0^* and C_1^* in (α) are in mutually opposite situations and those of (β) are the same.

For a general case, let c_ν^2 be the common boundary of C_λ and C_μ, and let γ_ν^* be a self-cutting of $\bar{C}_\lambda^*=f(\bar{C}_\lambda)$. In this case, there also exist two cases as above. If C_λ^* and C_μ^* are in the same situations, then we call γ_ν^* an *admissible self-cuttig*. If they are in opposite situations, then

we call γ_ν^* a *non-admissible self-cutting*. It is easily proved that if γ_ν^* is an admissible self-cutting of C_λ^*, then C_μ^* is contained in the interior of M_λ^*, and that if γ_ν^* is non-admissible, then C_μ^* is contained in the exterior of M_λ^*. Therefore, combining this with (4.6), we have the following statement:

(4.7) *If $\gamma_{\nu_1}^*$ is an admissible self-cutting of $\bar{C}_\lambda^*$, then there exists a circle $c_{\nu_2}^1$ on C_λ such that $\gamma_{\nu_2}^*$ and $\gamma_{\nu_1}^*$ are connected by a tube in the interior of M_λ^*.*

Now we are going to prove that non-admissible self-cuttings can be cancelled by a deformation of S in R^4. We shall begin with a special case.

(4.8) *Let γ_1^* be a non-admissible self-cutting of $\bar{C}_0^*$, where c_1^2 is an innermost one between the circles of the second kind, and $Bd\, C_0 = c_1^2$. Then γ_1^* can be cancelled by a deformation of S in R^4.*

Proof. Let C_1 be the component of $\mathfrak{S} - \sum c_\nu^2$ such that $\bar{C}_0 \cap \bar{C}_1 = c_1^2$. Suppose that $u(h(c_1^1)) > u(h(c_1^2))$ in Fig. 8 (α_1). Let S_1 be a sphere in R^4 such that S_1^* contains $\bar{C}_0^*$ as the inside of it, and $u(S_1) > u(h(\bar{C}_0))$. Take a small circle a on $h(C_0)$ and a circle b on S_1 respectively, and connect these circles by a tube T in R^4. Let A^* and B^* be disks on S^* and on S_1^* respectively such that they are contained in T^*, and $Bd\, A = a$, $Bd\, B = b$. Take a concentric circle a' of a on the disk A. Deform the inside A' of a', so that $u(A') > u(S - A)$. Since S_1 is trivial in $R^4 - S$, we can deform A into the disk $S_1 \cup T - B$, so that $(A - A') \to T$ and $A' \to (S_1 - B)$.

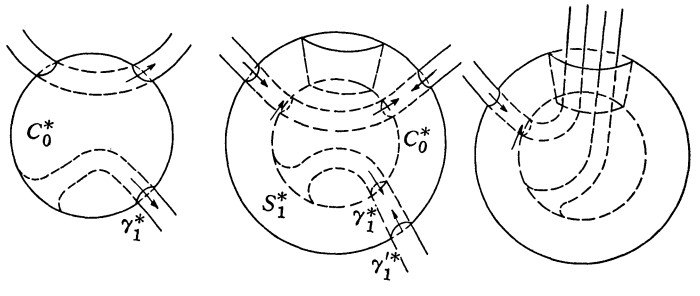

(α_1) (α_2) (α_3)

Fig. 8.

By this deformation, a new cutting parallel to each cutting of $\bar{C}_0^*$ arises. But, in virtue of the definition of the height of S_1, the pair of cuttings γ_1^*, $\gamma_1'^*$ are cancelled as shown in Fig. 8 (α_3), where $\gamma_1'^*$ is the new cutting corresponding to γ_1^*. Moreover, a pair of cuttings coorresponding to one of the terminal cuttings of every tube contained in $\bar{C}_0^*$

is cancelled by the same reason as γ_1^*. Therefore, the cuttings on $\bar{C}_0^*$ are not changed as a whole except γ_1^*, and $C_0 \cup C_1$ becomes a single component C_0'. We call the deformation above the *reversing* of C_0^*.

Each circle c_ν^2 of the second kind separates the sphere $\mathfrak{S}$ into two disks. We shall distinguish one of these disks by Δ_ν in the following manner: Fix an arbitrary innermost circle $c_{\nu_1}^2$ and put $\Delta_{\nu_1}=C_{\sigma_0}$, where $Bd\, C_{\sigma_0}=c_{\nu_1}^2$. Let C_{σ_1} be the neighbouring component of C_{σ_0}. Let $c_{\nu_2}^2$ be one of the bounding circles of C_{σ_1}, which is distinct from $c_{\nu_1}^2$. Let Δ_{ν_2} be the disk, such that $Bd\,\Delta_{\nu_2}=c_{\nu_2}^2$ and $\Delta_{\nu_2}\supset\Delta_{\nu_1}$. For each circle $c_{\nu_i}^2$ contained in Δ_{ν_2}, let Δ_{ν_i} be the disk such that $Bd\,\Delta_{\nu_i}=c_{\nu_i}$ and $\Delta_{\nu_i}\subset\Delta_{\nu_2}$. In such a manner we can define a disk Δ_ν for every c_ν^2, such that the collection of disks $\{\Delta_\nu\}$ forms a directed set by the relation of inclusion.

(4.9) *Let $c_\lambda^2; c_{\mu_1}^2, \cdots, c_{\mu_m}^2; c_{\nu_1}^2, \cdots, c_{\nu_n}^2$ be the bounding circles of C_ρ. Suppose that $\Delta_\lambda\supset(\sum_{i=1}^m \Delta_{\mu_i})\cup(\sum_{j=1}^n \Delta_{\nu_j})$ and that $\gamma_\lambda^*, \gamma_{\mu_1}^*, \cdots, \gamma_{\mu_m}^*$ are non-admissible self-cuttings of $\bar{C}_\rho^*$. If $\Delta_{\mu_1}^*, \cdots, \Delta_{\mu_m}^*; \Delta_{\nu_1}^*, \cdots, \Delta_{\nu_n}^*$ does not contain any non-admissible self-cutting, then the sphere S can be deformed in R^4, so that these non-admissible self-cuttings are cancelled.*

Proof. Put $\Delta(\lambda, \nu)=C_\rho \cup \sum_{j=1}^n \Delta\nu_j$. We shall reverse the perforated singular sphere $\Delta(\lambda, \nu)^*$. For this aim, we construct first of all a singular sphere S_1^* which serves the same rôle as S_1^* in (4.8).

Let $\tilde{c}_\lambda^2, \tilde{c}_{\mu_i}^2$ $(i=1, \cdots, m)$ be parallel curves to c_λ^2 and $c_{\mu_i}^2$ respectively on C_ρ. Let $\tilde{C}_\rho$ be the domain, such that $Bd\,\tilde{C}_\rho=\tilde{c}_\lambda^2\cup\sum_{i=1}^m \tilde{c}_{\mu_i}^2\cup\sum_{j=1}^n c_{\nu_j}^2$. Take parallel disks $\tilde{D}_{\mu_i}^{1*}$ to $D_{\mu_i}^{1*}$ and a parallel disk $\tilde{D}_\lambda^{1*}$ to D_λ^{1*}, so that $Bd\,\tilde{D}_{\mu_i}^{1*}=f(\tilde{c}_{\mu_i}^2)$ and $Bd\,\tilde{D}_\lambda^{1*}=f(\tilde{c}_\lambda^2)$ respectively. Then $S_1'^*=(\tilde{C}_\rho^*\cup\tilde{D}_\lambda^{1*}\cup\sum_{i=1}^m \tilde{D}_{\mu_i}^{1*})\cup\sum_{j=1}^n \bar{\Delta}_{\nu_j}^*$ forms a singular sphere, which does not contain any non-admissible self-cutting. Hence C_σ^*'s in $\Delta_{\nu_j}^*$ $(j=1, \cdots, n)$ and $\tilde{C}_\rho^*$ are in the same situation. If these situations are negative, then deform $S_1'^*$ toward the direction of the vector of the orientation of S^*. If the situations of C_σ^*'s and $\tilde{C}_\rho^*$ are positive, then deform $S_1'^*$ toward the opposite direction of the vector. Thus we get a singular sphere S_1^*, which is similar to $S_1'^*$.

There occur three kinds of new cuttings as follows:

(1*) Cuttings which appear as the intersections of S_1^* and S^*, where tubes of S^* run through S_1^*.

(2*) Cuttings which appear as the intersections of S_1^* and S^*, where tubes of S_1^* run through S^*.

(3*) Cuttings which are intersections of S_1^* itself.

Let γ_ν^* be an arbitrary cutting on Δ_λ^*. Let $\gamma_{\nu\alpha}^*, \gamma_{\nu\beta}^*$ and $\gamma_{\alpha\beta}^*$ be the corresponding new cutttings to γ_ν^* of (1*), (2*) and (3*) respectively.

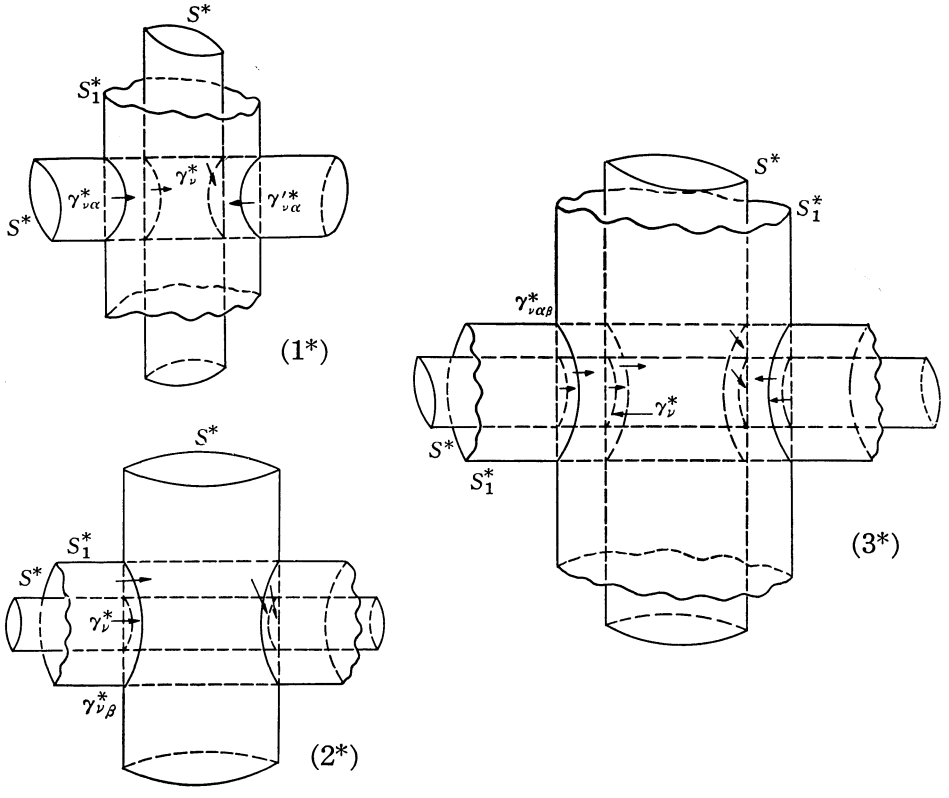

Fig. 9.

We shall define the relations of heights at these cuttings as follows:

(1) Let $\gamma'^*_{\nu\alpha}$ be the other terminal cutting of the tube of S^* in the interior of S_1^*. Then we define the height of S_1, so that S_1 is both the over surface at $\gamma_{\nu\alpha}^*$ and at $\gamma'^*_{\nu\alpha}$.

(2) The same relation as γ_ν^*, that is, if the tube of S, whose projection is parallel to the tube of S_1^*, is the over or under surface at γ_ν^*, then the tube of S_1 runs over or under S respectively.

(3) The same relation as $\gamma_{\nu\alpha}^*$ in the meaning of (2).

It is easily proved that S_1 is trivial in R^4-S in virtue of (1), (2) and (3).

We shall reverse $\Delta^*(\lambda, \nu)$, as we did in (4.8). Take a small circle a on $h(\tilde{C}_\rho)$ and a circle b on S_1. Let A be the disk on $h(\tilde{C}_\rho)$, such that $Bd\,A=a$, and let B be the disk on S_1 such that $Bd\,B=b$. Connect the circles a, b by a tube T. Since S_1 is trivial in R^4-S, we can deform the disk A, so that $A\to(S_1-B)\cup T$.

Thus we can reverse the perforated singular sphere $\Delta^*(\lambda, \nu)$. But

it happens that $\gamma^*_{\nu\beta}$ in (2) and $\gamma^*_{\nu\alpha\beta}$ in (3) are not canonical cuttings. If we replace these non-canonical cuttings with several canonical cuttings by the method of (4. 5), then some new non-admissible self-cuttings may arise. Therefore, we shall cancell these non-canonical self-cuttings by another way.

For each C_σ contained in $\Delta_\lambda - \sum_{j=1}^{n} \Delta_{\mu_j}$, take a point P_σ on C_σ, so that it is not contained in circles of the first kind. Connect P_{σ_1} and P_{σ_2} by a segment $l_{\sigma_1\sigma_2}$ if and only if C_{σ_1} and C_{σ_2} are mutually neighbouring components, so that $l_{\sigma_1\sigma_2}$ intersects the common boundary at a single point, and that $l_{\sigma_1\sigma_2}$ does not meet circles of the fiirst kind. The union of these segments makes a tree. We shall call the image of this tree on S^* a *leading curve* of the deformation.

The synopsis of the required deformation is explained as an enlargement of the tube T. We shall consider the most simple case, $n=1$. Let C_{σ_1} be the neighbouring component of C_ρ in Δ_{ν_1}. Let (r, θ, z) be a cylindrical coordinate system of R^3. We can suppose that A^* and $\tilde{C}^*_\rho - A^*$ are represented as the disk $(r \leqq 1, z=1)$ and the cylinder $(r=1, 0<z<1)$ respectively. Therefore, $C^*_{\sigma_1}$ is represented as the negative part of the

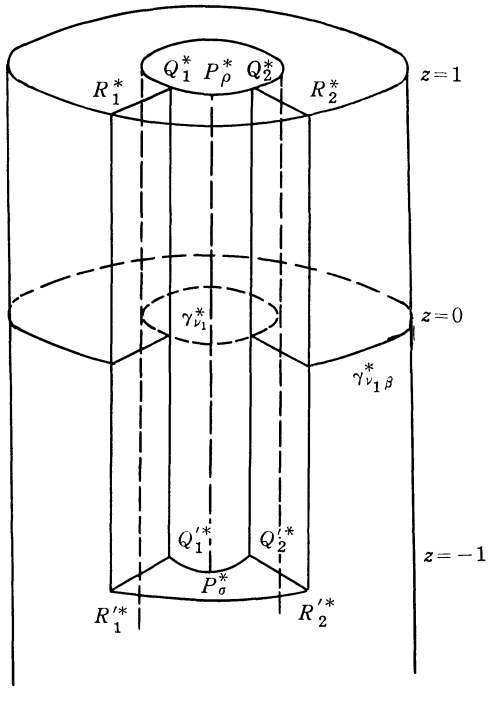

Fig. 10.

cylinder $r=1$. Moreover, we can suppose that the corresponding part of $\tilde{C}_\rho^*-A^*$ in S_1^* is represented as the cylinder ($r=2$, $0<z<1$) and that the tube T^* is represented as the ring surface ($1\leqq r\leqq 2$, $z=1$). Suppose that $l_{\rho\sigma}^*$ is represented as the segment ($r=1$, $\theta=0$, $-1\leqq z\leqq 1$), where $P_\rho^*=(1, 0, 1)$ and $P_{\sigma_1}^*=(1, 0, -1)$.

Take points $Q_1^*=(1, -\theta_0, 1)$ and $Q_2^*=(1, \theta_0, 1)$ on a^* and $R_1^*=(2, -\theta_0, 1)$ and $R_2^*=(2, \theta_0, 1)$ on b^*, where θ_0 is a sufficiently small positive number. Let $Q_1'^*$, $R_1'^*$; $Q_2'^*$, $R_2'^*$ be the corresponding points of Q_1^*, R_1^*; Q_2^*, R_2^* respectively on the plane $z=-1$.

In virtue of (2), it is easily proved that the surface composed of the disks $Q_1Q_2Q_2'Q_1'$, $Q_1Q_2R_2R_1$ and $R_1'R_2'R_2R_1$ is deformed into the surface composed of the disks $Q_1Q_1'R_1'R_1$, $Q_1'Q_2'R_2'R_1'$ and $Q_2Q_2'R_2'R_2$. In consequence of this deformation, the pair of cuttings $\gamma_{\nu_1}^*$ and $\gamma_{\nu_1\beta}^*$ becomes a single canonical cutting.

In the case of $n>1$, we can also enlarge the tube T in the similar way as above, so that non-canonical cuttings $\gamma_{\nu_1\beta}^*, \cdots, \gamma_{\nu_n\beta}^*$ are cancelled. Therefore, even in the case when the leading curve has branched points, we can continue the deformation as far as all non-canonical cuttings are not cancelled.

(4.10) *Suppose that* γ_λ^* *in* (4.9) *is an admissible self-cutting. In this case, we can also cancel non-admissible self-cuttings in* Δ_λ^*.

Proof. First of all we reverse the parforated singular sphere $\Delta^*(\lambda, \nu)$ in the same method as (4.9). In consequence of the deformation, there happen a new non-admissible self-cutting as the intersection of C_ρ^* and S_1^*. But this is the case of $m=0$ in (4, 9). Therefore we can cancel it by the reversing of the deformed sphere.

In virtue of (4.8), (4.9) and (4.10), we can prove by induction that non-admissible self-cuttings of S^* can be cancelled. Thus we have the following:

(4.11) *Every simply knotted sphere can be deformed, so that the deformed sphere does not contain any non-admissible self-cutting.*

Now we shall prove the following theorm, which is the purpose of this section.

(4.12) **Theorem 1.** *Every simply knotted sphere is equivalent to a symmetric ribbon sphere.*

Proof. From (4.6), (4.7) and (4.11), we can suppose that the circles of the first kind on every C_σ are divided into several pairs, so that the circles in a pair are mapped into the pair of terminal cuttings of a tube in M_σ^*. Moreover, we can suppose that these terminal cuttings have an opposite relations in height.

Renominate the circles of $f^{-1}(\Gamma(S^*))$, so that $(c^1_{\sigma,i}, c'^1_{\sigma,i})$, $(i=1, \cdots, l(\sigma))$ is a couple on C_σ, where $c^1_{\sigma,i}$ is mapped on the over surface at $\gamma^*_{\sigma,i}$ and $c'^1_{\sigma,i}$ is mapped on the under surface at $\gamma'^*_{\sigma,i}$.

Let $P_{\sigma,0}$ $(\sigma=0, 1, \cdots, n)$ be a point on C_σ which is not contained in the circles of the first kind, and let $P_{\sigma,i}$ be a point on $c^1_{\sigma,i}$ $(i=1, \cdots, l(\sigma))$. Connect $P_{\sigma,i}$ with $P_{\sigma,i+1}$ by a simple arc $s^\sigma_{i,i+1}$ $(i=0, \cdots, l(\sigma)-1)$, so that these arcs are mutually disjoint and do not intersect $f^{-1}(\Gamma(S^*))$ except their boundaries. Put $L_\sigma=(\sum_{i=0}^{l(\sigma)-1} s^\sigma_{i,i+1}) \cup (\sum_{i=1}^{l(\sigma)} D^1_{\sigma,i})$, where $D^1_{\sigma,i}$ is the interior of the circle $c^1_{\sigma,i}$. Moreover connect $P_{\sigma,0}$ and $P_{\tau,0}$ by a simple arc $l_{\sigma\tau}$ if and only if C_σ and C_τ are mutually neighbouring components, so that $l_{\sigma\tau}$ intersects the common boundary at a single point and does not intersect L_σ and L_τ except its end points.

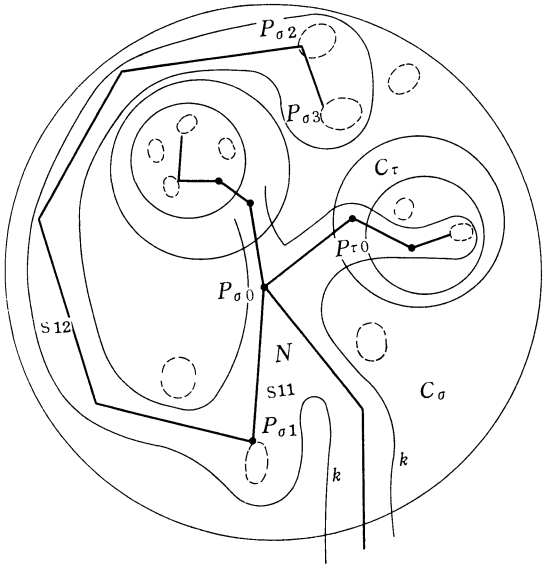

Fig. 11.

Let N be a sufficiently small neighbourhood of $\sum L_\sigma \cup \sum l_{\sigma\tau}$. Then the bounding curve k of N satisfies the conditions

(1) K separates $\mathfrak{S}$ into two disks D_+ and D_-, where D_+ contains $c^1_{\sigma,i}$ and D_- contains $c'^1_{\sigma,i}$ $(\sigma=0, \cdots, n;\ i=1, \cdots, l(\sigma))$,

(2) k intersects each $c^2_{\sigma,i}$ at two points.

Put $k^*=f(k)$ and deform S, so that $u(h(k))=0$, without changing the relation of heights at every cutting. Then D_+ and D_- satisfies the conditions of the inverse image of a ribbon. It is obvious that $h(D_+)$ and $h(D_-)$ are symmetric with respect to R^3. Thus we have completed the proof.

5. The Alexander polynomials

We are now in a position to prove the existence of a sphere which is distinct from simply knotted spheres. But before the discussion we shall review some history concerning knotted spheres.

After papers concerning spinning spheres by E. Artin [1] and others [2], [3], R. H. Fox and J. W. Milnor [6] discussed about slice knots or null-equivalent knots, which appear as an intersection of knotted spheres with a 3-dimensional subspace. In their paper they proved that the Alexander polynomials of slice knots are given in the form of $f(t)f(t^{-1})$. Several years later H. Terasaka [8] proved the converse of Fox-Milnor's theorem. In his paper, he tried to give an alternating proof of Fox-Milnor's theorem. But, since he assumed that every null-equivalent knot is represented as a ribbon knot, there exist some gap[4] in the proof. However it is valid that the Alexander polynomial of a ribbon knot is given in a form $f(t)f(t^{-1})$ as shown in Terasaka's paper. Following Terasaka's work, S. Kinoshita [9] proved the existence of a knotted sphere which has the given Alexander polynomial $f(t)$ with $f(1)=\pm 1$. For our purpose nothing new is necessary, but only a remark to Terasaka's alternating proof of Fox-Milnor's theorem is sufficient.

Let A be an arbitrary knot represented by a regular projection on the ground plane, and let C be a trivial knot represented by a circle which is disjoint from A on the ground plane. Connect a small arc α of A to a small arc γ of C by a band B which is represented by a pair of parallel curves, so that $(A\cup B\cup C)-(\alpha\cup\gamma)$ forms a knot k, where B may tangle with A, C or B itself. It is obvious that if A is a ribbon knot, then k is also a ribbon knot, and that conversely every ribbon knot is given in such a fashion.

We call the boundary curve of B, whose orientation coincides with the direction of B, that is from A to C, the positive side of B, and call the opposite one the negative side. By an under crossing of B with A or C, B splits into several parts $B_1, \cdots, B_n$ in this order. Let $b_{i,0}, \cdots, b_{i,l(i)}$ be the parts of the positive side of B_i $(i=1, \cdots, n)$, which do not contain under crossing arcs at intersections of B itself, and let $\bar{b}_{i,k}$ $(k=0, \cdots, l(i))$ be the corresponding negative side of $b_{i,k}$. A and C are also divided by B into $A_1, \cdots, A_N$ and $C_1, \cdots, C_M$ respectively. Moreover A_i $(i=1, \cdots, N)$ may splits into $a_{i,1}, \cdots, a_{i,n(i)}$ by some crossing points of A itself (Fig. 12).

Using the same notation for generating elements of $\mathfrak{F}(k)$ as arcs of k, Terasaka did as follows:

---

4) [7], p. 173, Problem 25.

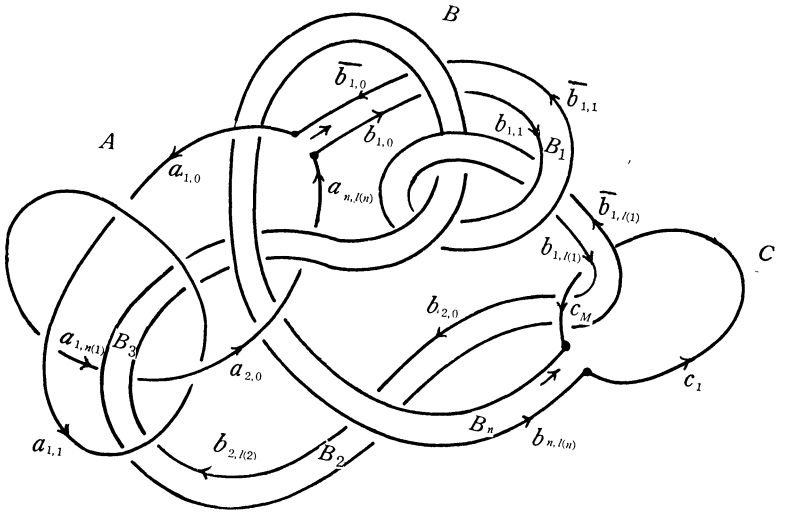

Fig. 12.

First of all he remarked that we can set

$$(5.1) \qquad b_{i,0}\bar{b}_{i,0}^{-1} = \cdots = b_{i,l(i)}\bar{b}_{i,l(i)}^{-1} = B_i\,, \qquad (i = 1, \cdots, n)$$

in the computation of the Alexander matrix of k. However, it should be noticed that the relations (5.1) are not valid in the group $\mathfrak{F}(k)$. In the next step, replacing generators $\bar{b}_{i,0}, \cdots, \bar{b}_{i,l(i)}; \cdots; \bar{b}_{n,0}, \cdots, \bar{b}_{n,l(n)}$ by $B_1, \cdots, B_n$ and $b_{1,0}, \cdots, b_{1,l(1)}; \cdots; b_{n,0}, \cdots, b_{n,l(n)}$ and eliminating $b_{1,1}, \cdots, b_{1,l(1)}$; $b_{2,1}, \cdots, b_{2,l(2)}; \cdots; b_{n,1}, \cdots, b_{n,l(n)-1}$, he got the following Alexander matrix M_k:

$B_1B_2\cdots B_n$	$b_{1,0}$	$b_{2,0}\cdots b_{n,0}b_{n,l(n)}$	$a_{1,0}\cdots a_{N,n(N)}$	$C_1\cdots C_M$
$\|\|g(x)\|\|$		0	0	0
*	1	$\|\|f(x)\|\|$	*	*
*		0	$\|\|\Delta_A(x)\|\|$	0
*		0	0	$\|\|\Delta_C(x)\|\|$

In the above matrix, the rows which contain the square matrix $\|\|g(x)\|\|$ of order n correspond to the relations at under crossings of the band B with A or C, and the rows which contain the square matrix $\|\|f(x)\|\|$ of order n correspond to the relations along the positive side of B. The minor $\|\|\Delta_A(x)\|\|$ is the Alexander matrix for the knot A, and $\|\|\Delta_C(x)\|\|$ is the Alexander matrix for the trivial knot C. In the last step he proved that $g(x) = \pm x^m f(x^{-1})$. Thus we have

(5.2) *If k is a ribbon knot, then there exists a polynomial $f(x)$, such that $\Delta_k(x)=\pm x^m f(x)f(x^{-1})$, where $\Delta_k(x)$ is the Alexander polynomial of k.*

Now we shall prove the following:

(5.3) **Theorem 2.** *Let k and S be the ribbon knot and the symmetric ribbon sphere of an arbitrary ribbon $\mathfrak{r}$. Then, there exists a polynomial $f(t)$, such that*

$$\Delta_k(t) = f(t)f(t^{-1}), \qquad \Delta_S(t) = f(t).$$

Proof. First of all, we shall prove the most simple case, that is the case where the knot A in Terasaka's proof is trivial. In virtue of the construction of S^* in § 3, $\mathfrak{F}(S)$ has the generators:

$$\begin{aligned}
\sigma(B_1) &= \sigma(B_{1,0}) = \cdots = \sigma(B_{1,l(1)}) \\
&= \sigma(A_1) = \cdots = \sigma(A_N), \\
\sigma(B_2) &= \sigma(B_{2,0}) = \cdots = \sigma(B_{2,l(2)}), \\
&\cdots\cdots\cdots\cdots\cdots\cdots \\
\sigma(B_n) &= \sigma(B_{n,0}) = \cdots = \sigma(B_{n,l(n)}) \\
&= \sigma(C_1) = \cdots = \sigma(C_M),
\end{aligned}$$

each of which corresponds to the part of k represented by the notation in parenthesis.

Now we shall define a mapping φ of the generator system of $\mathfrak{F}(k)$ onto the generator system of $\mathfrak{F}(S)$, such that

$$\varphi(b_{i,k}) = \varphi(\bar{b}_{i,k}) = \sigma(B_{i,k})^{-1}.$$

Then we have easily that

$$\begin{aligned}
&\sigma(B_{i,0}) = \cdots = \sigma(B_{i,l(i)}), \qquad (i = 1, \cdots, n) \\
&\sigma(A_1) = \cdots = \sigma(A_N), \quad \sigma(C_1) = \cdots = \sigma(C_M),
\end{aligned}$$

and that the mapping φ forms a homomorphism of $\mathfrak{F}(k)$ onto $\mathfrak{F}(S)$. Obviously the group $\mathfrak{F}(S)$ is isomorphic to the group $\mathfrak{F}^*(k)$, which has the same generators as $\mathfrak{F}(k)$ and has the same relations as that of $\mathfrak{F}(k)$ plus the following relations:

$$(*) \qquad B_1 = B_2 = \cdots = B_n = 1.$$

We add the new relations (*) in M_k to compute the Alexander matrix of $\mathfrak{F}^*(k)$. Then we have $\Delta_S(t)=f(t)$. The general case of the theorem is proved easily by induction.

(5.4) **Corollary.** *Every symmetric ribbon sphere has the Alexander polynomial.*

Since the elementary ideal[5] $\mathcal{E}_1$ of the Alexander matrix of the Fox's sphere is not principal, that is, it has not the Alexander polynomial, combining (5.4) with Theorem 1, 2, we have the following main theorem of this paper:

(5.5) **Theorem 3.** *There exist spheres which are distinct from simply knotted spheres.*

OSAKA CITY UNIVERSITY

Bibliography

[1] E. Artin: *Zur Isotopie zweidimensionaler Flächen in R_4*, Abh. Math. Sem. Univ. Hamburg **4** (1925), 174–177.

[2] E. R. Van Kampen: *Zur Isotopie zweidimensionaler Flächen in R_4*, Abh. Math. Sem. Univ. Hamburg **6** (1927), 216.

[3] J. J. Andrews and N. L. Curtis: *Knotted 2-spheres in the 4-sphere*, Ann. of Math. **70** (1956), 565–571.

[4] C. D. Papakyriakopoulos: *On Dehn's lemma and the asphericity of knots*, Ann. of Math. **66** (1957), 1–26.

[5] T. Homma: *On Dehn's Lemma for S^3*, Yokohama Math. J. **5** (1957), 223–244.

[6] R. H. Fox and J. W. Milnor: *Singularities of 2-spheres in 4-space and equivalence of knots*, unpublished. Cf. Bull. Amer. Math. Soc. **63** (1957), 406.

[7] R. H. Fox: *A quick trip through knot theory*, Top. of 3-manifolds and related topics, edited by M. K. Fort Jr., Prentice Hall (1962).

[8] H. Terasaka: *On Null-Equivalent Knots*, Osaka Math. J. **11**, No. 1, (1959).

[9] S. Kinoshita: *On the Alexander polynomials of 2-sphere*, Ann. of Math. **74** (1961), 518–531.

[10] T. Yajima: *On the fundamental groups of knotted 2-manifolds in the 4-space*, J. of Math., Osaka City Univ. **13** (1962), 63–71.

---

5) [7], p. 127.