OUKA
Osaka University Knowledge Archive

Title	Some relations among various numerical invariants for links
Author(s)	Shibuya, Tetsuo
Citation	Osaka Journal of Mathematics. 1974, 11(2), p. 313-322
Version Type	VoR
URL	https://doi.org/10.18910/10907
rights	
Note	

Osaka University Knowledge Archive : OUKA

https://ir.library.osaka-u.ac.jp/

Osaka University

Shibuya, T.
Osaka J. Math.
11 (1974), 313–322

SOME RELATIONS AMONG VARIOUS NUMERICAL INVARIANTS FOR LINKS

TETSUO SHIBUYA

(Received September 20, 1973)

Introduction. Throughout this paper, "*a link l of $\mu(l)$ components*" means disjoint union of $\mu(l)$ oriented 1-spheres in R^3.

In §1, we study some 3-dimensional numerical invariants of links, that is, $g(l)$ (genus of l), $u(l)$ (see Definition 1) and $c(l)$ (see Definition 3) will be defined and we will have some relations among them as follows.

Theorem 1. *For any link l, $g(l) \leqq c(l)$ and $u(l) \leqq c(l)$.*

In §2, the 4-dimensional numerical invariants $g^*(l)$, $g_r^*(l)$ (see Definition 4), $u^*(l)$, $u_r^*(l)$ (see Definition 5), $c^*(l)$ and $c_r^*(l)$ (see Definition 6) will be defined and the main theorem will be proved.

Theorem 2. *For any link l, we obtain*

$$\begin{array}{ccccc} g^*(l) & \leqq & g_r^*(l) & \leqq & g(l) \\ \wedge\| & & \wedge\| & & \wedge\| \\ c^*(l) & \leqq & c_r^*(l) & \leqq & c(l) \\ \wedge\| & & \| & & \vee\| \\ u^*(l) & \leqq & u_r^*(l) & \leqq & u(l) \end{array}$$

As is usual, two links l and l' are said to be of the *same type* or *isotopic*, denoted by $l \approx l'$, if there exists an orientation preserving homeomorphism f of R^3 onto itself such that $f(l)=l'$.

∂X, *Int* X and *cl* X represents the *boundary*, the *interior* and the *closure* of X respectively.

The author wishes to thank to the members of Kobe Topology Seminar for their kind and helpful suggestions.

1. 3-dimensional numerical invariants

Let l be a link of $\mu(l)$ components in R^3. It is known in [9], [11] that l always bounds an orientable connected surface F in R. The minimum genus of these surfaces is called the *genus* of the link l and is denoted by $g(l)$. Note that $g(F)$ denotes the usual genus of a surface F.

Let L be a diagram of l, i.e. $L=p(l)$, where p is a regular projection of R^3 to R^2 ([2]). L has in general at least one double point if l is not a trivial link (unknotted and unlinked). A link can be deformed into a trivial link by employing a finite number of unlinking operation (Γ) defined as follows.

(Γ) *Change an underpass into an overpass at a double point.*

DEFINITION 1. The minimum number of unlinking operations required to deform a given link l into a trivial link is called the *unlinking number* of l (in the 3-dimensional sense) and is denoted by $u(l)$.

DEFINITION 2. Let F_0 be a surface which may not be connected and f be an immersion of F_0 into R^3. Put $F=f(F_0)$. Suppose that F has a finite number of simple double lines and these double lines do not intersect each other. Each double line J is one of the following three types (see [4])

(1) a closed curve whose antecedents are closed curve J' and J'' that lie in *Int* F_0,

(2) an arc whose antecedents are an arc J' that spans ∂F_0 and an arc J'' that lies entirely in *Int* F_0,

(3) an arc whose antecedents are arcs J' and J'' each of which has an end point on ∂F_0 and the other one lies in *Int* F_0

We call J a *singularity* of F. The singularities satisfying the condition (1), (2), (3) will be called (*simple*) *loop*, *ribbon* and *clasp* singularities respectively. [4]

We call F a *non-singular* surface if f is an embedding.

Then, to define the *clasp number* $c(l)$ of a link l we need to prove the following lemma.

Lemma 1. *Any link l spans $\mu(l)$ singular disks whose singularities are only clasps and the number of these clasps is finite.*

Proof. Let n be the unlinking number of l and p be a regular projection of l such that there exist n double points $p_1, \cdots, p_n$ in $p(l)$ and l becomes a trivial link by (Γ)-operation along these points. We may make oriented small unknotted circles c_i, $i=1, \cdots, 2n$, near to p_{i_1} linking with l as shown Fig. 1 such that $L(l, c_i)=-L(l, c_{n+i})=1$ or -1 according as the orientation of l, where p_{i_1} is a point of $p^{-1}(p_i)\cap l$ and $L(l, c)$ denotes the linking number of l and c. Then there exist mutually disjoint bands B_i, $i=1, \cdots, 2n$, with $B_i\cap l=\partial B_i\cap l$ an arc and

$$l+\partial(\bigcup_{i=1}^{n} B_i)+(\bigcup_{i=1}^{n} c_i)\approx O^{\mu}$$

$$l+\partial(\bigcup_{i=1}^{2n} B_i)+(\bigcup_{i=1}^{2n} c_i)\approx l$$

where O^{μ} is a trivial link of $\mu=\mu(l)$ components and $+$ means addition in the homology sense. Let $E=\bigcup_{i=1}^{\mu} E_i$ be a union of mutually disjoint spanning disks

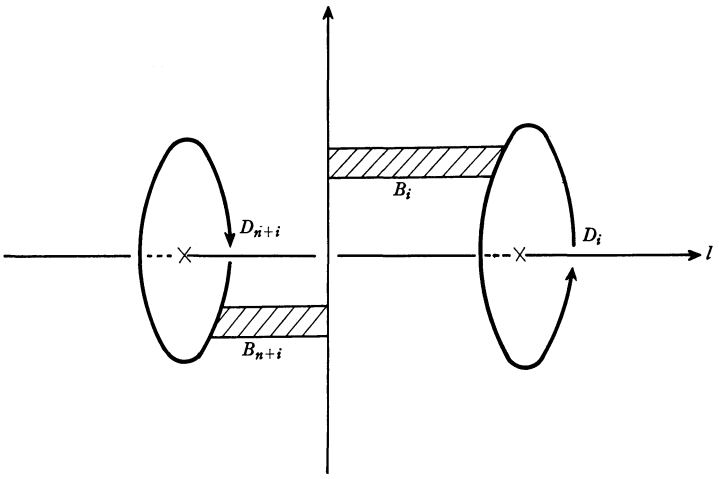

Fig. 1

of O^μ and $B=\bigcup_{i=n+1}^{2n} B_i$. By a slight modification of E, B and $D=\bigcup_{i=n+1}^{2n} D_i$, where D is oriented mutually disjoint disks with $\partial D_i=c_i$, we have $B\cap D=\partial B\cap\partial D$, $B\cap E=(\partial B\cap\partial E)\cup$(ribbon singularities), $D\cap E=$(clasp singularities) and $\partial(B\cup D\cup E)\approx l$. For each ribbon singularity J we draw a simple arc α_i on E to connect a point of ∂E and that of *Int* J and put $\tilde{E}=cl(E-\bigcup_{i=1}^{r} N_i)$, where r is the number of ribbon types on E and N_i is a regular neighborhood of α_i in E. Then clearly $\partial(B\cup D\cup\tilde{E})\approx l$ and the singularities of μ singular disks $B\cup D\cup\tilde{E}$ are only clasps and of course the clasp number of $B\cup D\cup\tilde{E}$ is finite. So the proof is complete.

DEFINITION 3. For any link l, there is a singular disk with only clasps which spans l by Lemma 1. The minimum number of the clasps is called the *clasp number* of l, denoted by $c(l)$.

Then we have,

Theorem 1. *For any link* l, $c(l)\geqq u(l)$, $c(l)\geqq g(l)$.

Proof. $c(l)\geqq u(l)$ is obvious from the definitions of these numbers. So we have to prove $c(l)\geqq g(l)$. Let D be singular disks such that $c(D)=c(l)$ and $\partial D=l$, where $c(D)$ is the number of clasps of D. Making use of orientation preserving cuts ([4], [8]) along all clasps, we get an orientable surface F of genus $c(l)$ such that $\partial F=\partial D=l$. So $c(l)\geqq g(l)$, which completes the proof.

REMARK. These inequalities can not be replaced by equalities. For example for the knot 6_2, 6_2 is alternating, so $g(6_2)=2$ ([1]) and $c(6_2)=2$ by using Theorem 1 but $u(6_2)=1$, and for the link ⊚ , $c($ ⊚ $)=u($ ⊚ $)=1$ but $g($ ⊚ $)=0$.

2. 4-dimensional numerical invariants

Let l be a link in $R^3[0]$, where $R^3[a]=\{(x, y, z, t)\in R^4 \mid t=a\}$. Since l bounds an orientable connected surface F in $R^3[0]$, l always bounds an orientable locally flat connected surface in $R^3[0, t_0)=\{(x, y, z, t)\in R^4 \mid 0\leqq t<t_0\}$. The minimum genus of these surfaces is an invariant of the link type ([3], [7]). It is denoted by $g^*(l)$ (in the 4-dimensional sense).

DEFINITION 4. Especially for any link l we may span an orientable locally flat surface F in $R^3[0, t_0)$ which has no minimum points with $\partial F=l$ in $R^3[0]$. The minimum genus of these surfaces is called the *ribbon type genus* of l and is denoted by $g_r^*(l)$.

It is clearly that $g_r^*(l)$ is an invariant of the link type of l.

Then from the definition of $g^*(l)$, $g_r^*(l)$ and $g(l)$, we have

Lemma 2. *For any link l, $g^*(l)\leqq g_r^*(l)\leqq g(l)$.*

A link l will be called *split* into two components l_1 and l_2 if there is a 3-ball B^3 such that $l_1\subset B^3$, $l_2\subset R^3-Int\, B^3$. Then l is denoted by $l=l_1\circ l_2$. Then

Lemma 3. *For any link l, there is a number μ such that $g^*(l)=g_r^*(l\circ O^\mu)$ for some trivial link O^μ of μ components.*

Proof. Let F be a locally flat orientable surface in $R^3[0, 1)$ with $\partial F=l$ in $R^3[0]$ and $g(F)=g^*(l)$. Let $p_1, \cdots, p_\mu$ be the minimum points of F. We may take μ distinct points $q_1, \cdots, q_\mu$ in $R^3[-1]$ and disjoint simple arcs $\alpha_1, \cdots, \alpha_\mu$ and α_i connects p_i with q_i and $\alpha_i\cap R^3[t]$ is at most one point for each i, $1\leqq i\leqq\mu$ and t, $0\leqq t<1$. Then we can deform F to a surface F' by an isotopy along α_i. The minimum points of F' are q_i and $F'\cap R^3[0, 1)$ has no minimum points. Of course, $F'\cap R^3[0]\approx l\circ O^\mu$, so $g_r^*(l\circ O^\mu)\leqq g^*(l)$. ([5], [10]).

Conversely, let F_0 be a locally flat surface in $R^3[0, 1)$ with $F_0\cap R[0]=l\circ O^\mu$ which has no minimum points and $g_r^*(l\circ O^\mu)=g(F_0)$. In $R^3[-1, 0]$ we make $l\times[-1, 0]$. As O^μ is splitted from l, O^μ bounds mutually disjoint disks D_i, $i=1, \cdots, \mu$, in $R^3[-1, 0]$ which do not intersect with $l\times[-1, 0]$. So $F=F_0\cup l\times[-1, 0]\cup(\bigcup_{i=1}^{\mu} D_i)$ is a locally flat orientlabe surface with boundary l and $g(F)=g(F_0)=g_r^*(l\circ O^\mu)$. Therefore $g^*(l)\leqq g(l\circ O^\mu)$, which completes the proof.

Lemma 4 is essential to prove the main theorem.

Lemma 4. *Let F be a locally flat orientable surface which has no minimum and maximum points and $F\cap R^3[0]=l$, $F\cap R^3[1]=l'$. Then there is a locally flat orientable surface F' properly embedded in $R^3[0, 1]$ and isotopic to F in $R^3[0, 1]$ ($F'\cap R^3[0]\approx l$ in $R^3[0]$, $F'\cap R^3[1]\approx l'$ in $R^3[1]$ respectively). Furthermore there exist some disjoint 3-balls B_i^3, $i=1, \cdots, n$, in $R^3[0]$ such that*

$$cl(F'-\bigcup_{i=1}^{n} B_i^3\times[0,1]) = cl(F'\cap R^3[0]-\bigcup_{i=1}^{n} B_i^3)\times[0,1]\,.$$

Proof. It may be assumed that F has n critical points and $R^3[t_i]$ contains only one critical point for t_i, $0<t_1<\cdots<t_n<1$. A critical point p_i may be changed by a critical band B_i^2 for each i (see [6]). We may deform F by an isotopy of $R^3[0,1]$ carrying B_i^2 into $R^3\left[\frac{1}{2}\right]$ so that maximum and minimum points do not appear in the resulting surface. We will write the resulting surface and the band F and B_i^2 again. Since $F\cap R^3\left(\frac{1}{2},1\right]$ is a locally flat orientable surface which has no maximum, minimum points and critical bands,

$$\left(F\cap R^3\left[\frac{1}{2},1\right]-\partial(\bigcup_{i=1}^{n} B_i^2)\right)\cup(\bigcup_{i=1}^{n}\alpha_i\cup\bar{\alpha}_i)\approx(F\cap R^3[1])\times\left[\frac{1}{2},1\right]$$

in $R^3\left[\frac{1}{2},1\right]$ (for α_i and $\bar{\alpha}_i$ see Fig. 2) Then using the same argument as in [10] we may assume that the critical bands do not intersect with each other. Put $F_1=F\cap R^3[1]\times\left[\frac{1}{2},1\right]$. Because $F\cap R^3\left[0,\frac{1}{2}\right)$ has no minimum, maximum points and critical bands, we see

$$\left(F\cap R^3\left[0,\frac{1}{2}\right]-\partial(\bigcup_{i=1}^{n} B_i^2)\right)\cup(\bigcup_{i=1}^{n}(\beta_i\cup\bar{\beta}_i))$$
$$\approx\left((F_1\cap R^3\left[\frac{1}{2}\right]-\partial(\bigcup_{i=1}^{n} B_i^2)\right)\cup(\bigcup_{i=1}^{n}\beta_i\cup\bar{\beta}_i))\times\left[0,\frac{1}{2}\right] \text{ in } R^3\left[0,\frac{1}{2}\right]$$

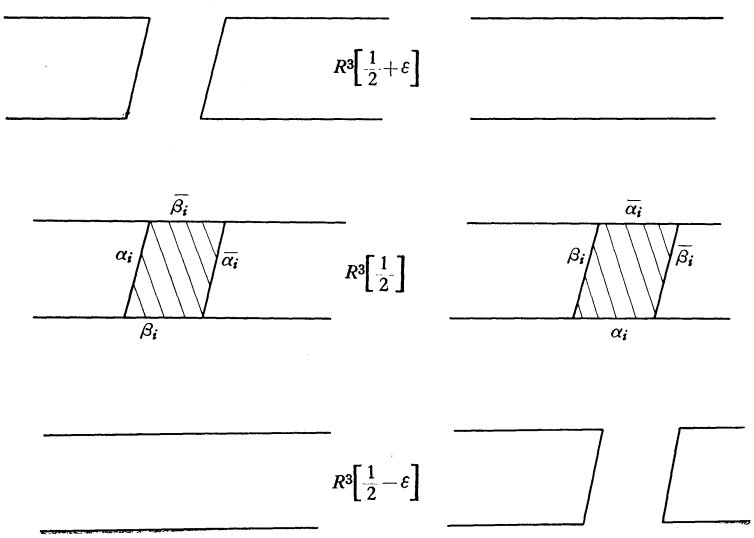

Fig. 2

Then we project mutually disjoint bands $\bigcup_{i=1}^{n} B_i^2$ in $R^3\left[\frac{1}{2}\right]$ to $R^3[0]$ by a natural projection p i.e. for any points $(x, y, z, t)\in R^4$, $p(x, y, z, t)=(x, y, z, 0)\in R^3[0]$. Then we can take mutually disjoint 3-balls B_i^3 each of which contains only one band properly, i.e. $Int\ B_i^3 \supset Int\ p(B_i^2)$ and $\partial B_i^3 \supset \partial(p(B_i^2))$. So we may easily determine the surface F' to be a required one. This completes the proof.

Let l be a link in R^3 (or $R^3[0]$). l is called a *weak ribbon link* if l bounds a singular surface F in R^3 of genus 0 with $\partial F=l$ and mutually disjoint ribbon singularities. And l is called a *weak slice link* if l bounds a non-singular locally flat orientable surface F of genus 0 in $R^3[0, \infty)$ with $\partial F=l$. ([3], [4]).

Then if l is a weak ribbon link l is also a weak slice link (see Lemma 5).

Lemma 5. *l is a weak ribbon link if and only if l bounds a non-singular locally flat orientable surface F in $R^3[0, 1)$ of genus 0 with $\partial F=l$ which has no minimum points.*

Proof. If l is a weak ribbon link, there is a singular surface F_0 in $R^3[0]$ of genus 0 with $\partial F_0=l$ and just ribbon singularities. Now we take small disks D_i, $i=1, \cdots, n$, on F_0 along the singularities such that $cl(F_0-\bigcup_{i=1}^{n} D_i)$ is a non-singular surface and $l\cap(\bigcup_{i=1}^{n}\partial D_i)=\phi$. As $\partial(\bigcup_{i=1}^{n} D_i)$ is a trivial link, we may construct mutually disjoint cones $p_i^*\partial D_i$ in $R^3\left[0, \frac{1}{2}\right]$, where $p_1, \cdots, p_n$ are different points in $R^3\left[\frac{1}{2}\right]$. Then $(F_0-\bigcup_{i=1}^{n} D_i)\cup(\bigcup_{i=1}^{n} p_i^*\partial D_i)$ is a required surface F.

Conversely, let F be a locally flat orientable surface of genus 0 with $\partial F=l$ which has no minimum points and is embedded in $R^3[0, 1)$. We can bring the maximum points of F to $R^3[2]$ by the same technique we used to prove Lemma 3 without making new maximum and minimum points and with ∂F fixed. Put the deformed surface F'. Clearly $F'\cap R^3[1]\approx O^n$ and $F'\cap R^3[0, 1]$ has no minimum and maximum points. So by Lemma 4, we may construct a proper surface F'' in $R^3[0, 1]$ which is isotopic to $F'\cap R^3[0, 1]$ and there exist mutually disjoint 3-balls B_i^3, $i=1, \cdots, p$, in $R^3[0]$ such that

$$cl(F''-\bigcup_{i=1}^{p} B_i^3\times[0, 1])\approx cl(F''\cap R^3[0]-\bigcup_{i=1}^{p} B_i^3)\times[0, 1]$$

and the mutually disjoint bands B_i^2 are properly embedded in $B_i^3\times\left[\frac{1}{2}\right]$. Let D, $i=1, \cdots, n$, be mutually disjoint disks in $R^3[1]$ with boundary O^n. Then we project $\tilde{F}=F''\cup(\bigcup_{i=1}^{n} D_i)$ on $R^3[0]$ by a natural projection p. Then we may easily prove that $\partial p(\tilde{F})\approx l$ and the singularities of $p(\tilde{F})$ are only ribbon singularities by

an easy modification of disks and bands. Now the proof is complete.

REMARK. From this Lemma, l is a weak ribbon link if and only if $g_r^*(l)=0$ (Clearly l is a weak slice link if and only if $g^*(l)=0$).

DEFINITION 5. The minimum number of unlinking (Γ) operations required to deform a given link l into a weak slice link, a weak ribbon link are called the *unlinking number* of l (in the 4-dimensional sense), denoted by $u^*(l)$, $u_r^*(l)$ respectively. We may easily prove the following.

Lemma 6. *For any link l, $u^*(l)\leqq u_r^*(l)\leqq u(l)$.*

By Lemma 1 any link l in $R^3[0]$ may span $\mu(l)$ singular disks D whose only singularities are finite clasps. Let $\alpha_1, \cdots, \alpha_n$ be all the clasps on D and take mutually disjoint regular neighborhoods $\bigcup_{i=1}^{n} N(\alpha_i\colon R^3[0])$. Then $\partial(N(\alpha_i\colon R^3[0])\cap D)\approx \mathcal{O}$. Let $p_1, \cdots, p_n$ be different points in $R^3[1]$ and make a cone $\tilde{D}_i=p_i{}^*(\partial(N(\alpha_i\colon R^3[0])\cap D))$ for each i and we may construct these cones not to intersect with each other. Then $\tilde{D}=(D-\bigcup_{i=1}^{n} N(\alpha_i\colon R^3[0]))\cup(\bigcup_{i=1}^{n}\tilde{D}_i)$ is a locally flat $\mu(l)$ disks with singularities $p_1, \cdots, p_n$ such that $\partial\left(N\left(p_i\colon R^3\left[\frac{1}{2}, \frac{3}{2}\right]\right)\cap\tilde{D}\right)\approx\mathcal{O}$, $\partial\tilde{D}=l$ and $\tilde{D}$ has no minimum points. So we may define the clasp number of a link (in the 4-dimensional sense) as follows.

Let F be an orientable surface of genus 0 with μ boundaries. Suppose that f is a locally flat immersion of F in $R^3[0, \infty)$ such that $f(\partial F)=l$ is a given link l in $R^3[0]$, $f(Int\ F)\subset R^3(0, \infty)$ and the singularities of $f(Int\ F)$ are finite points $p_1, \cdots, p_n$ with $\partial B^4(p_i)\cap f(Int\ F)\approx\mathcal{O}$.

DEFINITION 6. For all the locally flat immersions satisfying the above condition, the minimum number of these singularities is called the *clasp number* of l and is denoted by $c^*(l)$. Especially when we restrict Definition 6 only for the locally flat immersions which has no minimum points, the minimum number of these singularities is denoted by $c_r^*(l)$.

Then the next Lemma is trivial from the definition and the explanation above Definition 6.

Lemma 7. *For any link l, $c^*(l)\leqq c_r^*(l)\leqq c(l)$*

Modifying the technique we used to prove Lemma 3, we obtain

Lemma 8. *For any link l, there is a number μ such that $c^*(l)=c_r^*(l\circ O^\mu)$ for some trivial link O^μ.*

Now we will examine the relation between $g^*(l)$, $c^*(l)$, $u^*(l)$ and $g_r^*(l)$, $c_r^*(l)$, $u_r^*(l)$.

Lemma 9. *For any link,* $g^*(l) \leqq c^*(l)$, $g_r^*(l) \leqq c_r^*(l)$.

Proof. Let F be a locally flat non-singular surface except $c^*(l)$ points $p_1, \cdots, p_n$, where $n=c^*(l)$, with $\partial F=l$ and $l_i=\partial N(p_i: R^3[0, \infty)) \cap F \approx \mathcal{O}$. Then l_i may span an orientable surface F_i of genus 0 in $\partial N(p_i: R^3[0, \infty))$. So

$$\widetilde{F} = (F - \bigcup_{i=1}^{n} N(p_i: R^3[0, \infty))) \cup (\bigcup_{i=1}^{n} F_i)$$

is a non-singular locally flat orientable surface of genus n with $\partial \widetilde{F}=l$. Thus $g^*(l) \leqq c^*(l)$. We can prove $g_r^*(l) \leqq c^*(l)$ by using the technique to prove the first half of Lemma 9. Now the proof is complete.

Lemma 10. *For any link* l, $c^*(l) \leqq u^*(l)$ and $c_r^*(l) \leqq u_r^*(l)$.

Proof. Let l be a link in $R^3[0]$. Now we perform $u^*(l)$-times (or $u_r^*(l)$-times) (Γ) operation to l in $R^3(0, 1)$ so that l' in $R^3[1]$ is a weak slice (or weak ribbon) link. Then there exist proper annuli F_0 in $R^3[0, 1]$ with $\partial F_0 = l \cup (-l')$ and F_0 has no minimum and maximum points and singularities are finite points $p_1, \cdots, p_n$ in $Int\ F_0$, where $n=u^*(l)$ (or $u_r^*(l)$), such that $\partial N(p_i: R^3[0, \infty)) \cap F_0 \approx \mathcal{O}$. As l' is a weak slice (or a weak ribbon) link, we may span a locally flat orientable surface F_1 in $R^3[1, \infty)$ with $\partial F_1 = l'$ (if l' is a weak ribbon link, F_1 has no minimum points by Lemma 5). Then there is a singular surface $F_0 \cup F_1$ of genus 0 whose boundary is l. Thus $c^*(l) \leqq u^*(l)$ (or $c_r^*(l) \leqq u_r^*(l)$). This completes the proof of Lemma 10.

And by Lemma 11, $c_r^*(l) = u_r^*(l)$ follows.

Lemma 11. *For any link* l, $u_r^*(l) \leqq c_r^*(l)$.

Proof. Let l be a link in $R^3[0]$ and F be a surface in $R^3[0, 1)$ which has no minimum points with $\partial F=l$ and $c_r^*(l)$ be the number of clasps. F has m singular points $p_1, \cdots, p_m$ and n maximum points $p_{m+1}, \cdots, p_{m+n}$, where $m=c_r^*(l)$. We may connect these points to distinct points $q_1, \cdots, q_{m+n}$ in $R^3[2]$ by disjoint arcs $\alpha_1, \cdots, \alpha_{m+n}$ such that $\alpha_i \cap F = \partial \alpha_i \cap F = p_i$ and $\alpha_i \cap R^3[t]$ is at most one point for each i, $0 < t \leqq 2$. By an isotopy we may bring p_i to q_i along α_i with ∂F fixed to make a new surface F' which is isotopic to F and $F' \cap R^3[1] \approx \mathcal{O} \circ \cdots \circ \mathcal{O} \circ O^n$, where the number of $\mathcal{O}$ is m. By Lemma 4, F' is deformed to F'' which is a proper surface in $R^3[0, 1]$ and is isotopic to $F' \cap R^3[0, 1]$ ($F'' \cap R^3[0] \approx F' \cap R^3[0]$ in $R^3[0]$ and $F'' \cap R^3[1] \approx F' \cap R^3[1]$ in $R^3[1]$), and $cl(F'' - \bigcup_{i=1}^{p} B_i^3 \times [0, 1]) = cl(F'' \cap R^3[0] - \bigcup_{i=1}^{p} B_i^3) \times [0, 1]$ for some mutually disjoint 3-balls B_i^3 in $R^3[0]$. Let D_i^3, $i=1, \cdots, m$, be mutually disjoint 3-balls in $R^3[1]$ such that D_i^3 contains only one $\mathcal{O}$ in its interior and $D_i^3 \cap D_j^2 = \phi$, where D_j^2 is a spanning disk of O_j which is a component of O^n, for each i, j, $1 \leqq i \leqq m$, $m+1 \leqq j \leqq m+n$. Then we may take a simple arc β_i in $p(D_i^3) - \bigcup_{j=1}^{p} B_j^3$ to connect two points of l as shown in

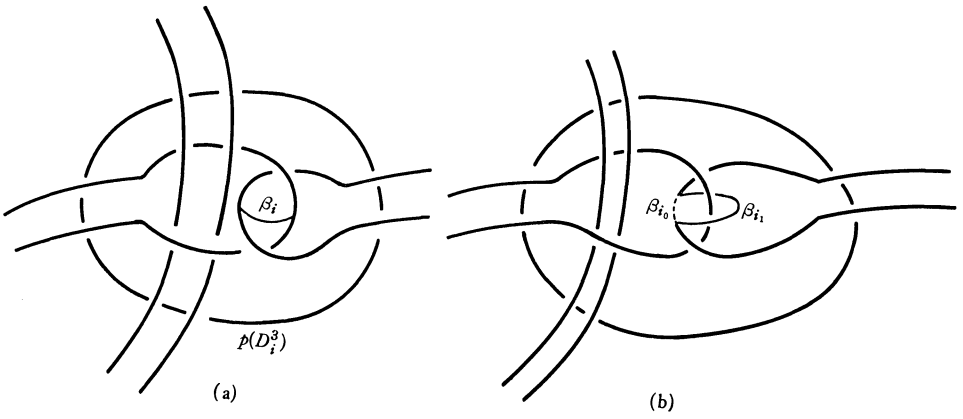

Fig. 3

Fig. 3 (a) such that $\mathfrak{D}$ becomes a trivial link by the (Γ) operation along $p^{-1}(\beta_i)\cap R^3[1]$ in D_i^3 for each i, where p is a natural projection of $R^3[0, 1]$ to $R^3[0]$. Then we determine β_{i_0}, β_{i_1} as shown in Fig. 3 (b) which may be taken in the neighborhood of β_i and $F'''=(F''-(\overset{m}{\underset{i=1}{\cup}}\beta_{i_0}\times[0, 1]))\cup(\overset{m}{\underset{i=1}{\cup}}\beta_{i_1}\times[0, 1])\cup(\overset{m+n}{\underset{j=m+1}{\cup}}D_j)\cup(\overset{2m}{\underset{p=1}{\cup}}D_p)$, where D_i and D_{m+i} are disjoint disks in Int D_i^3. Then as F''' has no minimum points, $\partial F'''\cap R^3[0]=l'$ is a weak ribbon link by Lemma 5 and l is obtained from l' by $c_r^*(l)$-times (Γ) operation. So $u_r^*(l)\leqq c_r^*(l)$ which completes the proof.

Let $\sigma(l)$ be the *signature* of a link (for the definition of (l), see [7]), then it is known $\frac{1}{2}(|\sigma(l)|-\mu(l)+1)\leqq g^*(l)$ by Theorem 9.1 [7].

Now we complete our researches.

Theorem 2. *For any link l, we obtain* $\frac{1}{2}(|\sigma(l)|-\mu(l)+1)\leqq g^*(l)$ *and*

$$\begin{array}{ccccc} g^*(l) & \leqq & g_r^*(l) & \leqq & g(l) \\ \wedge\| & & \wedge\| & & \wedge\| \\ c^*(l) & \leqq & c_r^*(l) & \leqq & c(l) \\ \wedge\| & & \| & & \vee\| \\ u^*(l) & \leqq & u_r^*(l) & \leqq & u(l) \end{array}$$

REMARK. If l is a non-trivial weak ribbon link of 1 component, then $g_r^*(l)=c_r^*(l)=u_r^*(l)=0$, but $g(l)\cdot c(l)\cdot u(l)\neq 0$.

Question. In the above diagram of 4-dimensional numerical invariants of links, which inequality can be replaced by an equality?

OSAKA CITY UNIVERSITY

References

[1] R.H. Crowell: *Genus of alternating link types,* Ann. of Math. (2) **69** (1959), 258–275.
[2] R.H. Crowell and R.H. Fox: Introduction to Knot Theory, Ginn, 1963.
[3] R.H. Fox: Some Problems in Knot Theory, Topology of 3-manifolds, Prentice Hall (1962), 168–176.
[4] R.H. Fox: *Characterization of slices and ribbons,* Osaka J. Math. **10** (1973), 69–76.
[5] F. Hosokawa and T. Yanagawa: *Is every slice knot a ribbon knot?,* Osaka J. Math. **2** (1965), 373–384.
[6] F. Hosokawa: *On trivial 2-spheres in 4-space,* Quart. J. Math. Oxford (2) **19** (1968), 249–256.
[7] K. Murasugi: *On a certain numerical invariant of link types,* Trans. Amer. Math. Soc. **117** (1965), 387–422.
[8] C.D. Papakyriakopoulos: *On Dehn's lemma and the asphericity of knots,* Ann. of Math. **66** (1957), 1–26.
[9] H. Seifert: *Uber das Geschlecht von Knoten,* Math. Ann. **110** (1934), 571–592.
[10] S. Suzuki: *On slice link,* Master Thesis in Waseda Univ. (1967).
[11] G. Torres: *On the Alexander polynomial,* Ann. of Math. **57** (1953), 57–89.
[12] H. Wendt: *Die gordisch Auflosung von Knoten,* Math. Z. **42** (1937), 680–696.