Osaka University Knowledge Archive

Title	The Role of Imperfection on Ductile Collapse
Author(s)	Ueda, Yukio
Citation	Transactions of JWRI. 1990, 19(2), p. 161-173
Version Type	VoR
URL	https://doi.org/10.18910/12295
rights	
Note	

Osaka University Knowledge Archive : OUKA

https://ir.library.osaka-u.ac.jp/

Osaka University

The Role of Imperfection on Ductile Collapse†

Yukio UEDA*

Abstract

Imperfection of structural member may be divided into several categories: initial deflection as geometrical one, residual stress as mechanical one, heterogenity as metallugical one, etc. Many other factors such as boundary condition, damages due to preloading contains or causes also imperfections. These imperfections influence the performance of stuctural members mostly detrimentally. However, the influences are very little in some cases.

In this paper, the role of imperfection is discussed to have deep understanding on it, which may reflect upon increase of reliability of the structures.

KEY WORDS: (Imperfection) (Welding distortion) (Welding residual stress) (Heterogenity) (Boundary condition) (Ductile collapse) (Buckling)

1. Introduction

In general, stresses contained in a self-balanced body are called residual stresses. Residual stresses are produced by many causes such as plastic deformation produced in mechanical processing, heat treatment, or welding. The source of residual stresses may be called "residual inherent strains"[1].

In general, residual inherent strains may be decomposed into effective and non-effective parts. If effective inherent strains are imposed to the original object, the same residual stresses as the original ones are produced, but no residual stresses are created by non-effective ones (compatible inherent strains to produce only deformation such as uniform expansion-shrinkage or uniform shear). However, locked-in stresses may be produced by both effective and non-effective inherent strains, if the deformation of the object is restrained. The residual inherent strains induce not only residual stresses but also deformation or distortion. These influence the performance of structures and their components, such as buckling, brittle fracture, and fatigue, and also affect their rigidities by large deflection and/or elastic-plastic behaviors whose plastification initiates usually by lower external loads.

When the influence of residual stresses is dealt with, their distribution plays an important role. **Fig.1** represents residual stresses distribution in H-sections and T-sections, which are produced by rolling and fabricated by welding. The two different processes of production induce different patterens of distribution[2].

For welding residual stresses in a rectangular plate, two typical patters are considered, as shown in **Figs. 2**

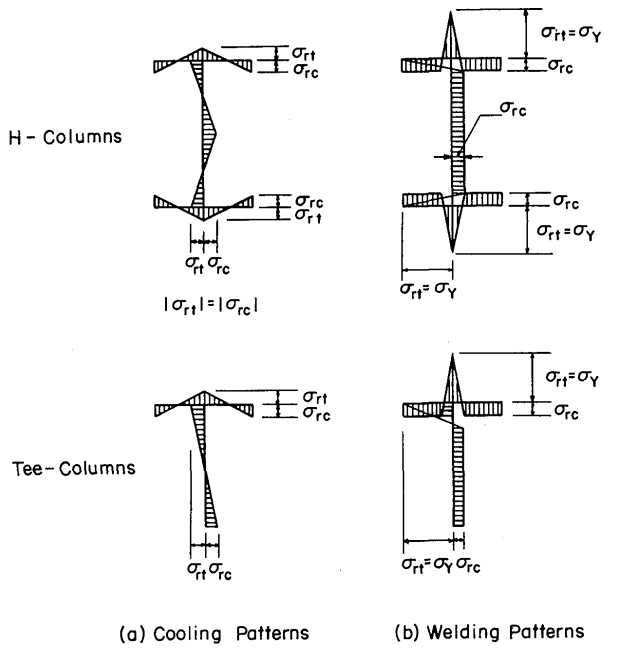

Fig. 1 Idealized residual stress patterns for illustrations of column curves.

and **3**. One is that produced in a plate whose pair of parallel sides are welded, such as a panel between stiffeners, webs of columns or beams, etc. (**Fig. 3(a)**). The other is that induced in flanges or stiffeners whose one side is welded and the opposite side is free. (**Fig. 3(b)**). In any welding residual stresses distribution, tensile stresses are produced at and in the vicinity of the weld line and compressive ones are induced to be equilibrating with the tensile one in the cross-section.

There is generally a close relation between welding residual stresses and deformation (deflection). First, a plate furnished from the factory has an initial deflec-

† Received on November 7, 1990

* Professor

Transactions of JWRI is published by Welding Research Institute of Osaka University, Ibaraki, Osaka 567, Japan

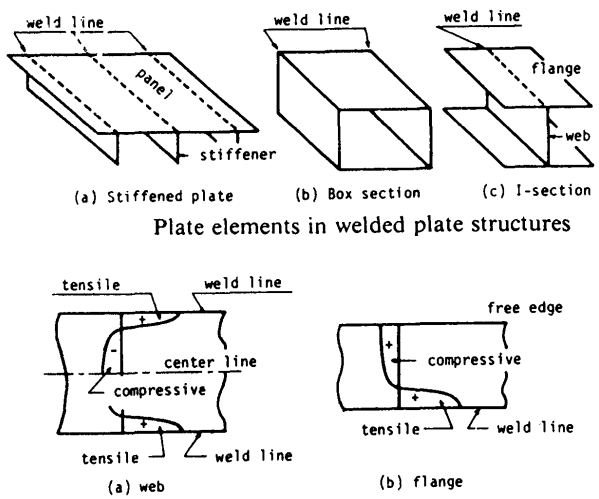

Fig. 2 Two typical patterns of distribution of welding residual stresses.

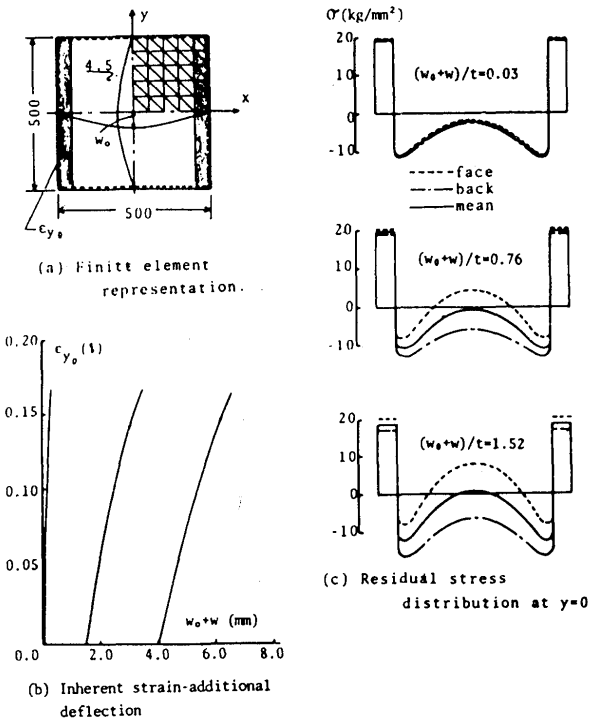

Fig. 3 Additional deflection and residual stress distribution caused by inherent strain. (F.E.M. analysis).

tion. Additionally, welding deformation is produced primarily by thermal angular distortion of a fillet weld of stiffeners welded to the panels along their edges. Simultaneously additional deflection is produced by the compressive residual stresses due to shrinkage of the weld beads and the adjacent portions of the plate. Being replaced the shrinkage by inherent strains ε_{y0} as shown in **Fig. 4(a)**, the relations between the magnitude of the imposed inherent strains and the central deflection, and the distribution of the residual stresses along $y=0$ are calculated and represented in **Fig. 4(b)** and **(c)** for the plate 4.5 mm thick. The calculated distribu-

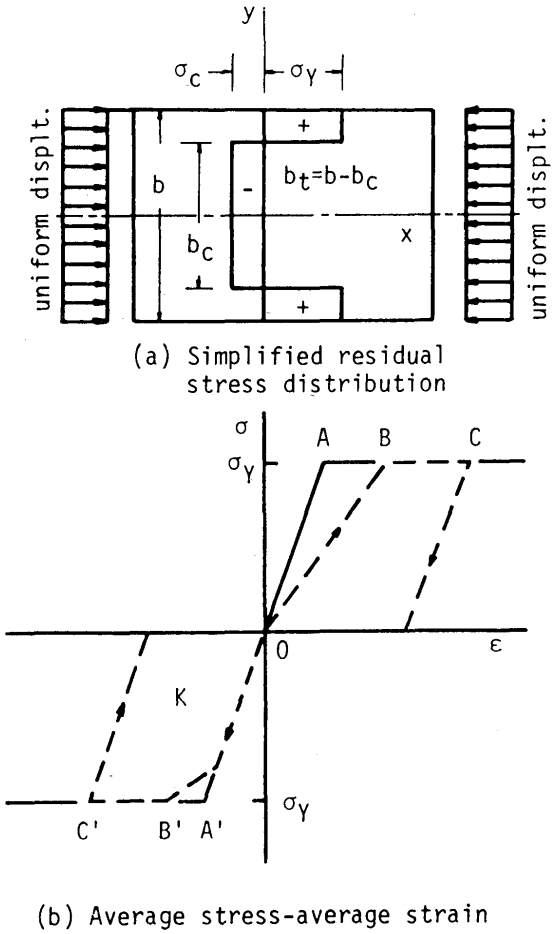

Fig. 4 In-plane rigidity of a plate containing residual stresses under a uniaxial load.

tion of residual stresses coincide well with the measured ones, both in sense and magnitude[3].

2. Residual Stresses

2.1 Influence on average stress-strain relation

First, the average stress-strain relation of a member which contains residual stresses is different from that of the original material. This implies that the rigidity of the member is affected by the existence of residual stresses. As an example, the fundamental elastic-plastic behavior of a rectangular plate containing residual stresses is shown in the following.

To make the discussion simple, it is assumed that (1) the pattern of welding residual stress distribution is as shown in **Fig. 5(a)**; (2) it is uniform along the length of the plate (x axis); and (3) the material is elastic perfectly-plastic. First, if a plate is completely free from welding residual stresses, the elastic-plastic behavior of the plate is the same as the original material; that is, the average stress-strain relation is shown by the solid line in Fig. 5. Next, containing welding residual stresses when a plate is subjected to a tensile load producing a uniform displacement, the portions under the tensile residual stresses are at the yield stress and not effective, and the plate

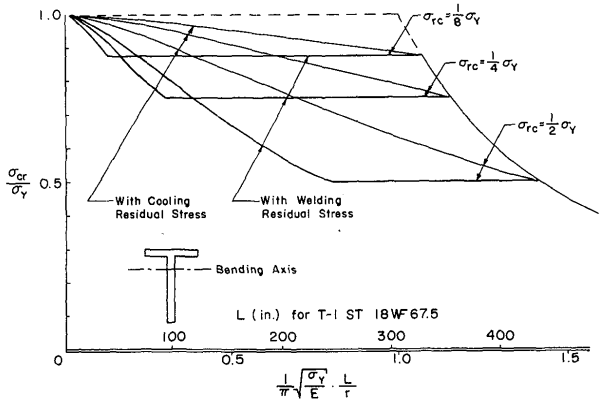

Fig. 5 column curves for flexural buckling of the-column.

behaves in an elastic-plastic manner at the beginning of loading, as if the breadth of the plate were b_c. Then the apparent rigidity of the plate is lower than the original one and the average stress-strain relation is shown by the dashed line. However, as the welding residual stresses are assumed to be self-equilibrating, the compressive residual stress is $\sigma_c=\sigma_Y\ b_t/b_c$ and the apparent yield stress in this portion σ_{Yc} is $\sigma_Y+\sigma_{Yc}$. Therefore, the total load carrying capacity is $(\sigma_Y+\sigma_{Yc})\ (b_c)\ (t)=\sigma_r\ bt$, which is the same as that of the plate free from residual stress. When the plate is unloaded, the relationship takes the path indicated by the arrows in the same figure 5, and the line is parallel to the solid one. The plate becomes free from residual stress. This is the basic idea behind mechanical stress relieving. When a compressive force is applied to the plate, the stress-strain relation is just same as that of the plain plate until the stress reaches point K, where the portion under the compressive residual stresses yields. Then, the behavior of the plate is elastic-plastic and the rigidity of the plate decreases greatly. The load carrying capacity is the same as before.

2.2 Influence on buckling strength and ultimate strength

(A) Columns[2)]

Here, consider the buckling of a column containing residual stresses.

The following assumption are made for the residual stresses. (1) They are self-equilibrating in a cross-section and symmetric with respect to the axis or axes of symmetry of the cross-section. (2) They are uniform along the length. Then, the total stress σ in a cross-section is evaluated as

$$\sigma = \sigma_0+\sigma_r \qquad \text{in the elastic range} \qquad (1)$$

$$= E_s(\varepsilon_0+\varepsilon_r) = \sigma_Y \qquad \text{in the plastic range} \qquad (2)$$

where, σ_0 : appleid stress $=P/A$ $\quad \varepsilon_0=\sigma_0/E$
σ_r : residual stresses $\quad \varepsilon_r=\sigma_r/E$
E_s : secant modulus $\quad \sigma_Y$ = yield stress

When a column containing residual stresses is subjected to a concentrated load P at the center of the cross-section, a set of general differential equations for elastic buckling are shown as

$$EI_y\frac{d^4u}{dz^4}+P\frac{d^2u}{dz^2}-PY_0\frac{d^2\phi}{dz^2}=0 \qquad (3)$$

$$EI_x\frac{d^4v}{dz^4}+P\frac{d^2v}{dz^2}-PX_0\frac{d^2\phi}{dz^2}=0 \qquad (4)$$

$$C_w\frac{d^4\phi}{dz^4}-\left[C_T-Pr_0^2-\int_A\sigma_r\rho_0^2dA\right]\frac{d^2\phi}{dz^2}$$
$$+PY_0\frac{d^2u}{dz^2}-PX_0\frac{d^2v}{dz^2}=0 \qquad (5)$$

Equations (3) and (4) are for flexural buckling and do not include any terms of residual stress σ_r and Eq. (5) for torsional buckling and σ_r is included. This implies that the effect of residual stresses is observed in the buckling related with Eq. (5). In the case of a column with two symmetric axes of the cross-section, either flexural or pure torsional buckling takes place. Unless the yield stress of the material is much higher than that of usual constructional steel, the flexural buckling load is much lower that the torsional buckling load. The residual stresses affect torisonal buckling but flexural buckling. In the case of a column with single symmetric axis or no symmetric axis, coupling of flexural and torsional bucklings occurs. And the residual stresses influence the buckling strength.

When a column containing residual stresses is loaded by concentrated compressive load at the center of the cross-section, the buckling loads at individual cases given by the following equations.

—Flexural buckling—

$$P_{cr}=\pi^2\frac{B}{L^2} \qquad (6)$$

where, $B=EI$ for elastic, E_tI for inelastic
: flexural rigidity (7)
E_t : tangent modulus,
L : length of the column

—Torsional buckling—

This buckling occurs for a cross-section with two symmetric axes.

In this case, the shear center is located at the center of the cross-section. The buckling strength is given as

$$P_{cr}=\frac{I_p}{A}\left(\frac{\pi^2}{L^2}C_w+C_T-\int_A\sigma_r d^2dA\right) \qquad (8)$$

where, $C_w=\int E_t w_n^2 t ds$ $\quad w_n$; warping function (9)

$$C_T = \int G_t \frac{t^3}{3} ds \qquad I_p \text{; polar moment of inertia} \tag{10}$$

G_t : tangent modulus of rigidity
$G_t = G$ for plastic,
$= G$ by the incremental theory of plasticity
G by the deformation theory

Residual stresses influence the elastic and inelastic buckling strength as seen from the third term in Eq. (8). In inelastic buckling, residual stresses affect C_w and C_T, additionally.

—Flexural-torsional buckling—

For a cross-section with one symmetric axis,

$$\left(\frac{\pi^2}{L^2}B_y - P_{cr}\right)\left(\frac{\pi^2}{L^2}C_w + C_T - \int_A \sigma\rho^2 dA\right) - P_{cr}^2(Y_0 - Y_c)^2 = 0 \tag{11}$$

For a cross-section without symmetric axis,

$$\left(P_{cr} - \frac{\pi^2}{L^2}B_x\right)\left(P_{cr} - \frac{\pi^2}{L^2}B^h\right)\left(\frac{\pi^2}{L^2}C_w + C_T - \int_A \sigma\rho^2 dA\right) - P_{cr}\left(P_{cr} - \frac{\pi^2}{L^2}B_x\right)(Y_0 - Y_c)^2 - P_{cr}^2\left(P_{cr}^2 - \frac{\pi^2}{L^2}B_y\right)(X_0 - X_c)^2 = 0 \tag{12}$$

where, B_x and B_y: flexural rigidities with respect to x and y axes, respectively

X_0 and Y_0 : co-oridinates of shear center

X_c and Y_c : co-ordinates of the center of elastic portion of the cross-section

In the above X_c and Y_c indicate that additional eccentricity may be produced if the center of elastic portion moves from the original center of the cross-section due to spread of plastic portion in a cross-section. Residual stresses influence not only the elastic buckling but also inelastic buckling.

Figs. 6 and **7** represent results of calculation for pure flexural buckling and flexural torsional buckling strengths of T-section with two types of residual stresses.

(2) Plates[4)]

When a flat plate containing residual stresses $\{\sigma_r\} = \{\sigma_{xr}, \sigma_{yr}, \tau_{xyr}\}^T$ is subjected to in-plane stresses, $\{\sigma\} = \{\sigma_x, \sigma_y, \tau_{xy}\}^T$, the differential equation for elastic buckling is expressed by the following equation.

$$D\left[\frac{\partial^4 w}{\partial x^4} + 2\frac{\partial^4 w}{\partial x^2 \partial y^2} + \frac{\partial^4 w}{\partial y^4}\right] + h\left[(\sigma_x + \sigma_{xr})\frac{\partial^2 w}{\partial x^2} + 2(\tau_{xy} + \tau_{xyr})\frac{\partial^2 w}{\partial x \partial y} + (\sigma_y + \sigma_{yr})\frac{\partial^2 w}{\partial y^2}\right] = 0, \tag{13}$$

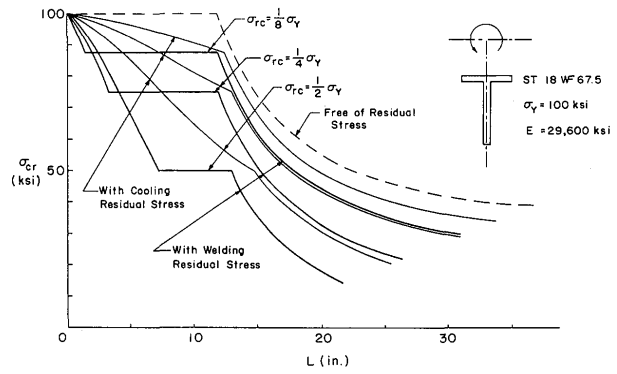

Fig. 6 Column curves for flexural torsional buckling of columns.

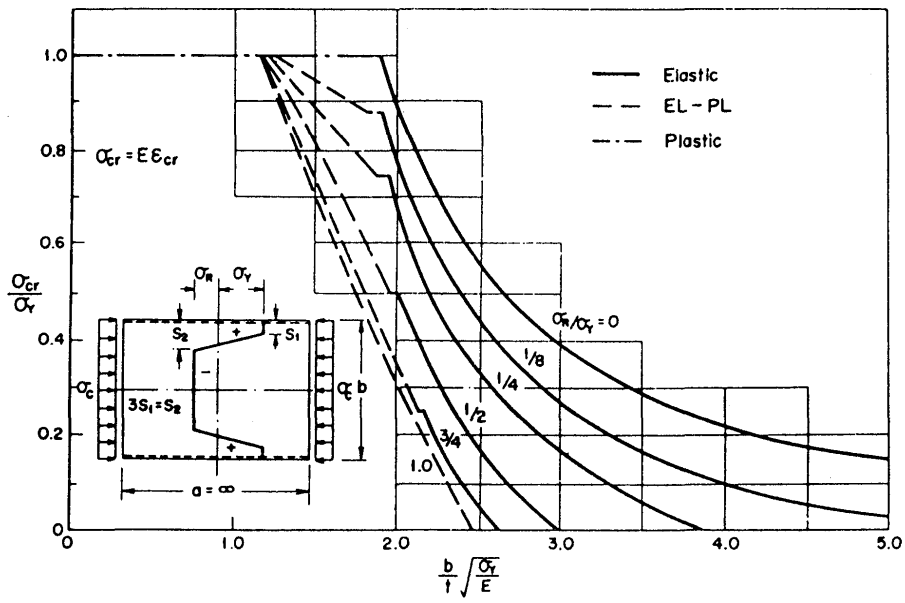

Fig. 7 Buckling strength of plates with residual stresses (deformation theory).

From this equation, it may be anticipated, the effect of residual stresses on elastic buckling. The equilibrium equation (13) may be expressed using the principle of minimum potential energy, that

$$0 = \delta V$$

where,

$$V = \iint \frac{D}{2}\left[\left(\frac{\partial^2 w}{\partial x^2}\right)^2 + 2(1-\nu)\left(\frac{\partial^2 w}{\partial x \partial y}\right)^2 + 2\nu\left(\frac{\partial^2 w}{\partial x^2}\right)\left(\frac{\partial^2 w}{\partial y^2}\right) + \left(\frac{\partial^2 w}{\partial y^2}\right)^2\right] dxdy$$
$$- \iint \frac{h}{2}\left[(\sigma_{rx}+\sigma_x)\left(\frac{\partial w}{\partial x}\right)^2 + 2(\tau_{rxy}+\tau_{xy})\left(\frac{\partial w}{\partial x}\right)\left(\frac{\partial w}{\partial y}\right) + (\sigma_{ry}+\sigma_y)\left(\frac{\partial w}{\partial y}\right)^2\right] dxdy \,. \tag{14}$$

The second term of Eq. (14) includes residual stresses and represents the loss of potential energy which is the external work done during buckling.

Integration of each term, $\sigma_{xr}(\partial w/\partial x)^2$, $\sigma_{yr}(\partial w/\partial y)^2$ and $\tau_{xyr}(\partial w/\partial x)(\partial w/\partial y)$, do not vanish, since $(\partial w/\partial x)$, $(\partial w/\partial y)$ and $(\partial w/\partial x)(\partial w/\partial y)$ are not constant across the section even the residual stresses $\{\sigma_r\}$ are self-equilibrating in a cross-section.

When the applied stresses increase, plastic portion initiates where the sum of $\{\sigma\}+\{\sigma_r\}$ satisfies the yield condition. Then, the stress distribution becomes elastic-plastic. The rigidity of this portion is different from that of elastic portion. This is the second effect of residual stresses on elastic-plastic buckling of plate elements. To deal with the plastic portion, the incremental theory of plasticity or the deformation theory is applied.

As a basic example, compressive buckling of a long simply supported rectangular plate with uniform residual stresses along its length is analyzed (**Fig. 8**).

In the elastic buckling,

$$\sigma_{cr} = \frac{\pi^2 E t^2}{12(1-\nu^2)}\left(\frac{a}{m}\right)^2\left(\frac{m^2}{a^2}+\frac{1}{b^2}\right)^2 - \sigma_1 \tag{15}$$

where, $\sigma_1 = \frac{1}{\pi}(\sigma_e+\sigma_Y)\sin\mu\pi$ if $s_1=s_2$ in Fig. 8.

In the elastic-plastic buckling,

$$\sigma_{cr} = \sigma_Y - \sigma_c + \sigma_1 \tag{16}$$

σ_1 : given according to the theory of plasticity (17)

In the plastic buckling,

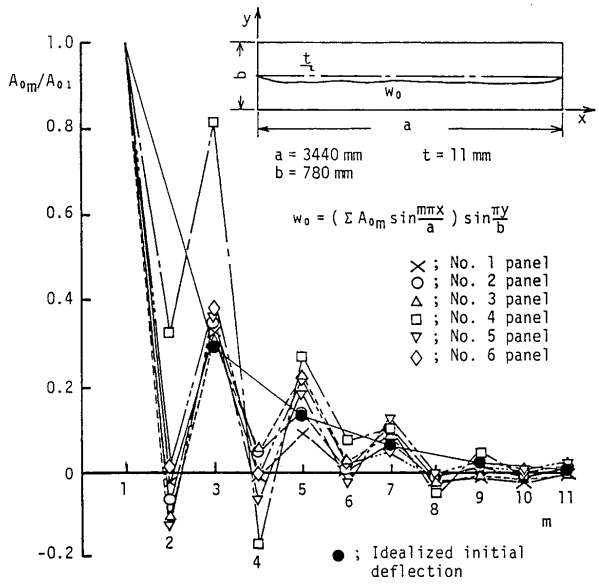

(b) a x b x t = 3440 x 780 x 11 mm (Car carrier)

Fig. 8 Components of measured initial deflection. $a \times a \times t = 3440 \times 780 + 11$ mm (car carirer).

$$\sigma_{cr} = \sigma_Y, \quad \varepsilon_{cr} = 2\sigma_Y/E + \varepsilon_1 \tag{18}$$

ε_1 : given according to the theory of plasticity (19)

Equation (15) indicates that the residual stresses reduces compressive elastic buckling strength irrespective to the aspect ratio by a certain magnitude which is dependent on only the residual stress distribution.

The buckling strength varies with respect to the aspect ratio. A long plate buckle at the minimum buckling strength which can be obtained by changing the aspect ratio. Calculated minimum buckling strength is represented in Fig. 8. For the plastic portion, the deformation theory is applied.

3. Initial Deformation

3.1 Modes of initial deformation

Structural members used in ship and offshore structures may be classified into columns, plates and cylindrical shells. These are mainly fabricated by welding which induces initial deflections accompanying residual stresses, as mentioned in 1.

Usually, columns including struts can be assumed to be straight with uniform cross-section. Complex initial deformation along the longitudinal axis may be decomposed into bending and twisting components which are represented in a series of sinuisoidal functions. The fundamental mode may have the largest magnitude and may coincide with the fundamental mode of buckling or collapse mode.

For built-up sections of thin plate, local deforma-

tion is also produced as same as plate elements mentioned later. Welding deformation of a plate element surrounded by stiffeners, beams etc., which are attached by fillet weld is also complex. As mentioned in 1, angular distortion of fillet weld produces cylindrical deformation and residual stresses add deformation of buckling modes. The welding deflection of a long rectangular plate, W_0, may be expressed by a series of sinuisoidal functions.

$$w_0 = \left(\sum A_{0m1} \sin\frac{m\pi x}{a}\right)\sin\frac{\pi y}{b}$$
$$\equiv \sum A_{0m} \sin\frac{m\pi x}{a}\sin\frac{\pi y}{b} \qquad (20)$$

The magnitude of each coefficient decreases as the member of mode increases as shown in **Fig. 9**. The initial deflection may be idealized as shown in **Fig.10** since the amplitudes of component modes are very close to the actual observed ones shown in Fig. 9. Although the amplitude of the first mode is largest, this does not coincide with the buckling mode or the collapse mode. This is one of the fundamental difference between the effects of initial deformation on the strength of a column and plate.

Information on initial deformation of shell elements is very few in spite of many kinds and types of shell structures.

In addition to the welding deformation, local deformation due to contact or collision may be regarded as initial deformation, but this is dealt with in the separate section. In this report, large initial deflection which is intentionally furnished is also excluded.

3.2 Influence on buckling and ultimate strengths

When an initially deflected column or plate is subjected to axial force or in-plane forces, stresses induced

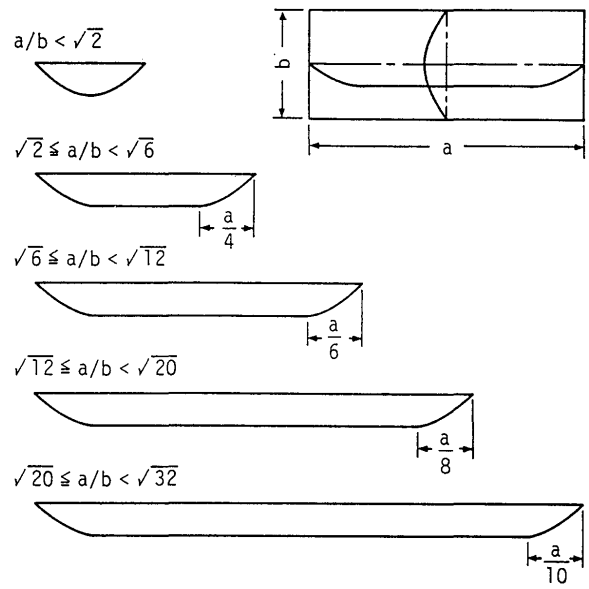

Fig. 9 Idealized modes of initial deflection.

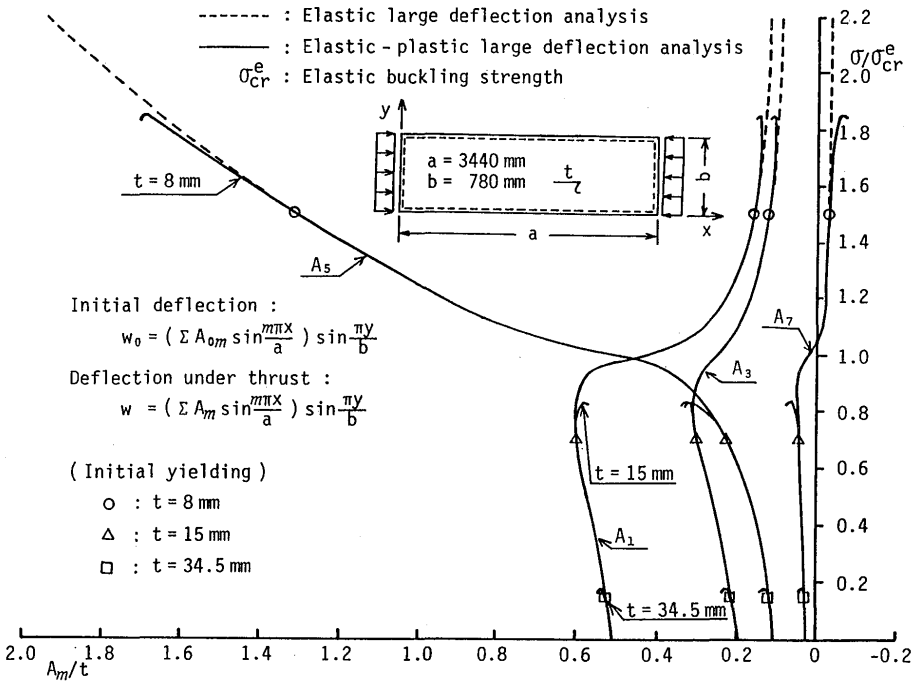

(a) Relation between non-dimensionalized deflection coefficients and mean compressive stress

Fig. 10 Deflection and plastification of long rectangular plates with initial deflections under compressive loading. Relationship between non-dimesionalized deflection coefficients and mean compressive stress.

in the member are not only uniform stress in the thickness, but also bending stress. At the same time, the axial or in-plane rigidity of the member is usually smaller than that without initial deflection. This implies that an initially deflected member does not show buckling in a strict sense. However, in the case of plate, the deflection mode changes at a certain amount of load. Then, in this report, the meaning of buckling may be used in a little broader sense. Here, the effect of initial deflection is forcused on buckling and ultimate strengths in relation to ductile collapse. Theoretical analysis of such member as initially deflected one needs to take into account the effect of large deflection, so-called large deflection analysis.

(A) Columns

A column may have two types of initial deflection. One is over-all and the other is local. These initial deflections influence over-all and local deformations as same as initial deflections themselves.

For simplicity of discussion, a column is assumed to be simply supported at both ends. Then, the first mode component of initial deflection reduces axial rigidity due to large deflection and the carrying capacity (ultimate strength) additionally due to plastic deformation by bending.

When a column is made of thin plate, local deflection is observed and it reduces the local strength and rigidity (to be mentioned in the next item). In this case, the restraining condition between the plate components, such as web and flange, plays an important role on the local behavior, which affects over-all behavior. Reduction of local strength and rigidity results in reduction of overall strength and rigidity of the column. The compressive ultimate strength of a column with initial imperfection, which are initial deflection and residual stresses, is given as so-called column curves which were obtained theoretically and experimentally by many investigations.

(B) Plates

Here, main emphasis is put on compressive behavior of a single plate and a continuous plate which are dealt with separately.

—Single plate—

When a long simply supported rectangular plate with such initial deflection as shown in Fig. 9 is subjected to compression, all components of the initial deflection are amplified almost at the same proportion by an increases of load until the load reaches nearly the critical one as represented in **Fig. 10**. Above this load, all components decrease except one which becomes predominant. This deflection mode is selective among all so as to indicate the lowest possible collapse load[5].

When a plate is short, the number of large components if initial deflection is limited to two or three. If only the second and the third mode components of initial deflection, Eq. 20 are assumed for a plate with the aspect ratio of 2.0 as

$$w_0 = \left(A_{02}\sin\frac{2\pi x}{a} + A_{03}\sin\frac{3\pi x}{a}\right)\sin\frac{\pi y}{b} \qquad (21)$$

The final stable deflection mode under thrust can be the second or the third mode. This is determined by the ratio of the amplitudes of these two components and there is the critical ratio which indicates the transition of these two stable modes[6].

In a special case, snap-through can be observed on a thin rectangular plate with initial deflection of a particular conbination of two modes (A_{02} t=0.8 and A_{04}/t=0.392, t: thickness of plate). The snap-through load is between the two critical loads calculated for the two independent modes. This indicates that a certain combination of deflection modes may increase the lower critical load[7].

The shape of initial deflection may influence the behavior of a short plate. For example, when a square plate simply supported along the edges is subjected to thrust, the rigidity and the ultimated strength change according to the shape irrespective of the thickness of plate if the magnitude of initial deflection becomes large **(Fig.11)**[3].

On compressive behavior of a plate near the ultimate strength, local plastification prevails in the plate, which is an additional factor to determine the collapse mode.

Such aspect ratios of a plate as gives the minimum buckling strength and the ultimate strength are dif-

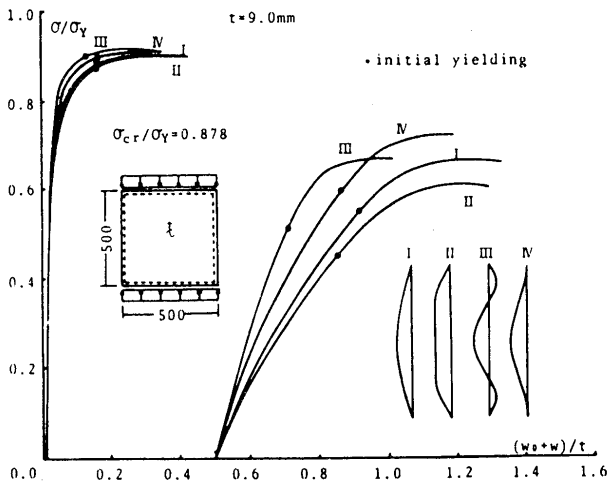

(c) Applied compressive stress-central deflection for t=9.0 mm

Fig. 11 Effects of the shapes of inital deflection on rigidity and strength of square plates under thrust.

ferent in a certain deflection mode. For example shown in **Fig. 12**, the minimnm buckling strength for m half waves is obtained for the aspect ratio bending m. The minimnm ultimate strength for one half wave is obtained for the aspect ratio being between 0.5 to 1.0 depending upon the slenderness ratio, the magnitude of initial deflection etc. If a plate is forced to deflect in one wave mode until the ultimate strength reaches, an abrupt change in the ultimate strength is observed near the aspect ratio being $\sqrt{2}$, where the buckling mode changes for one to two (**Fig. 13**). If initial deflection contains the first and second modes, the minimnm ultimate strength is attained, being selected an appropriate deflection mode, as shown in **Fig. 14**. Except the aspect ratio being below 0.5 or so, the minimnm ultimate strength is regarded as constant irrespective to the aspect ratio, and this is influenced by only the magnitude of the same component deflection as the collapse mode[5].

In the case of thin plate, the ultimate strength state is attained after the elastic deflection mode becomes stable. In the case of thick plates, the collapse mode is determined by plastic deformation initiated from most stressed fibres before elastic deflection mode becomes stable.

Then in the first case, the stable deflection mode is equal to or one or two mode higher than the buckling mode. In contrast with this, in the latter case, the collapse mose is determined by the plastic deformation near the loading edges, which is strongly dependent upon the curvature of the initial deflection[5].

4. Other Imperfection and Influencing Factors

Residual stresses and initial deflection which are induced during the production process are the main influencing factors on the strength of structural com-

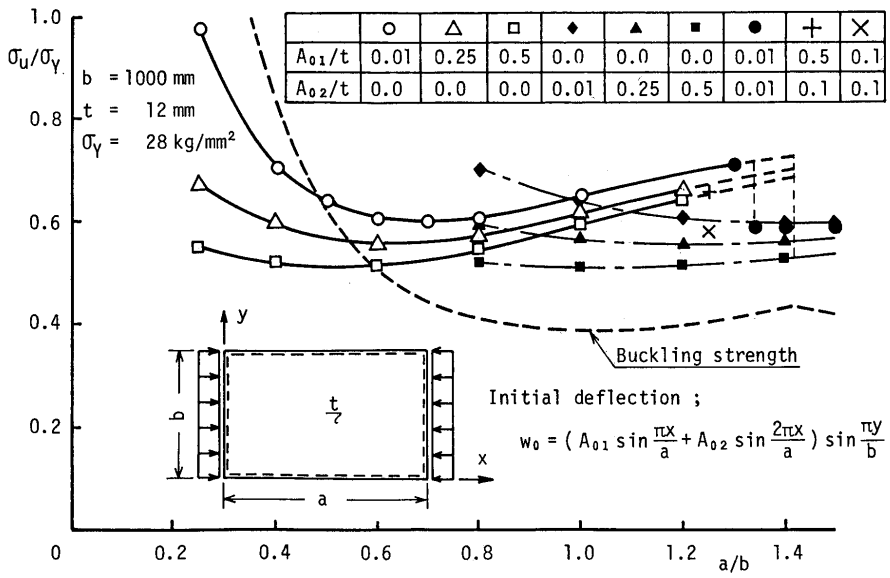

	○	△	□	◆	▲	■	●	+	×
A_{01}/t	0.01	0.25	0.5	0.0	0.0	0.0	0.01	0.5	0.1
A_{02}/t	0.0	0.0	0.0	0.01	0.25	0.5	0.01	0.1	0.1

Fig. 12 Compressive ultimate strength of short rectangular plates with uni-modal initial deflection.

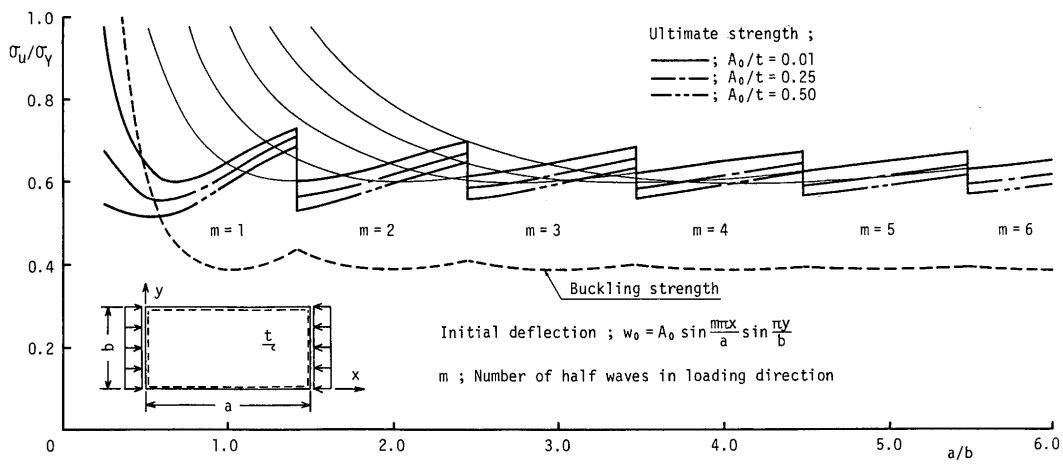

Fig. 13 Ultimate strength of a rectangular plate under thrust when collapse mode is the same as buckling mode.

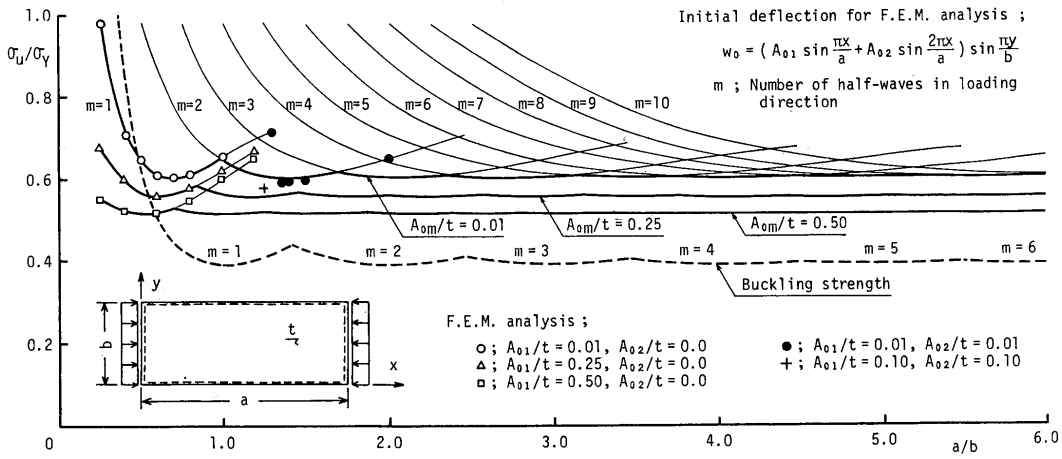

Fig. 14 Ultimate strength of a rectangular plate with initial deflection under thrust.

ponents.

In addition to these, there are other types of imperfections, such as material discontinuity, damages, etc. and the boundary conditions of structural components such as in-plane constraint and flexural restraint influence also the behavior of the components. Thus, when the strength of a plate element taken out of the large size structure is considered, the boundary condition is very important.

Material discontinuity is observed often in welded structural components depending on the kinds of structural steel and electrode. In the case of the conventional type of structural steel, the difference of the yield stresses between the base plate and the electrode cause the discontinuity of mechanical properties. Usually the yield stress of electrode is higher or lower than that of the base plate in the case of lower yield strength or higher yield strength steel, respectively. These mechanical characteristics may be called overmatching and lowermatching, respectively.

In the case of new kinds of processed steel, such as TMCP (Thermo-Mechanical Controlled Processed Steel), welding heat-input produces softening of the base plate in a rather wider range from the welded line. The discontinuity of the mechanical properties is more evident.

In similar to this, but different from imperfection, there are so-called hybrid structural components, which are composed of elements of two or more different mechanical properties. This is out of the scope of this chapter.

Due to contact and collision, structural components are subjected to damages. Columns and beams are induced bending deformation, plates are deflected and local denting is observed on pipes.

The above mentioned influencing factors will be discussed in the following sections.

4.1 Material discontinuity

When a welded joint is a type of lowermatching or with soft joint, that is the yield stress of the welded portion is lower than that of the base plate, the strength of a structural element may be lower than that of an element without welded joint.

There are a series of research on the elastic-plastic behavior of a welded joint with soft joint, in which special attention is paid to the fracture strength[8]. Here our attention is forcused to ductile collapse and the strength of a column and a plate with soft joint[9].

First, both base plate and welded portion are assumed to behave in elastic-perfectly-plastic manner and the yield stresses are σ_b and σ_s, respectively. As the fundamental study, the yield strength of a butt welded joint (**Fig. 15**) id analyzed. The analysis was carried out on a strip with a unit width, being applied complied compressive force at both edges, assuming three boundary conditions for the sides of the strip, such as plane strain, plane deformation and plane stress. The relations between the yield strength and the width of soft joint are shown in Fig. 15.

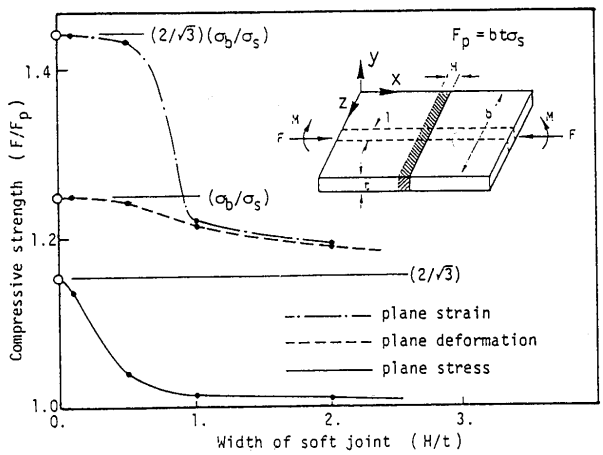

Fig. 15 Effect of soft joint width on its compressive strength.

When the restraint against plastic deformation becomes severe, the yield strength increases, either in the thickness or/and width direction(s). In the case of plane deformation, the yield strength becomes the same as without soft joint.

When a strip with soft joint at the midlength is subjected to pure bending, the full plastic moment is obtained by analysis, it is shown as a function of the length to thickness ratio, (H/t), as represented in **Fig. 16**. In this case, the restraint against plastic flow increase the full plastic moment.

In the case where structural members collapse forming plastic mechanism, the collapse load is dependent upon whether plastic hinges are formed at or close to soft joints or not.

Here, the ultimate strength of a column with soft joint at the midlength is analyzed by FEM, assuming that the column is initially deflected by thickness/1000 at center and is subjected to axial force, and the length of soft joint is the same as the thickness. The results of analysis for three different columns shown in **Table 1** are represented in **Fig. 17** being compared with those without soft joint. The ultimate strength of slender column (elastic buckling) is not affected by the existence of soft joint, but in the case of the shorter columns (plastic buckling), the ultimate strength is the lower.

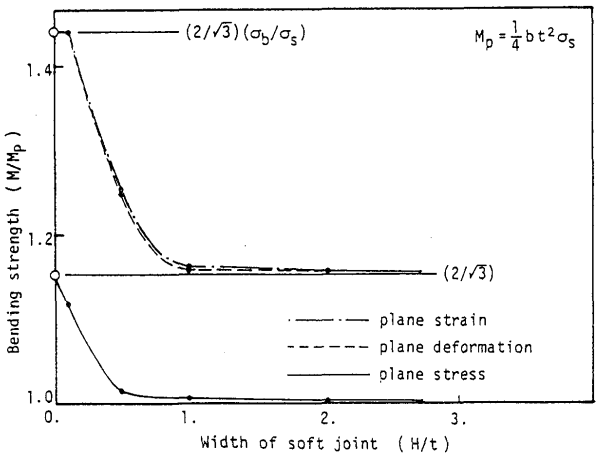

Fig. 16 Effect of soft joint width on its bending strength.

Table 1 Dimensions of columns under compression

	$\gamma = \lambda^2$	t (mm)	b (mm)	L (mm)
E.B.M.	2.0	20.0	20.0	415.6
T.B.M.	1.0	20.0	20.0	293.9
P.B.M.	0.5	20.0	20.0	207.8

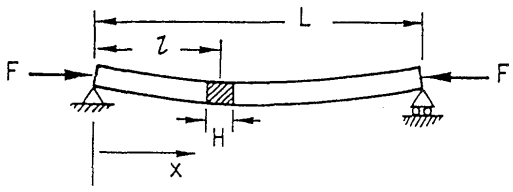

Here, the compressive ultimate strength of a square plate with soft joint is considered. There are many kinds of combination for the loaction of soft joint and supporting condition.

First, it is assumed that square plates have three different slenderness ratios as shown in **Table 2** and the width of soft joint is the same as the plate thickness for the supporting boundary and twice of the plate thickness for the joint inside the boundary. The ultimate strength is obtained by performing elasto-plastic large deflection analysis and the results are represented in Table 2, in which the ultimate strength is shown by the ratio to that of a square plate without soft joint. When

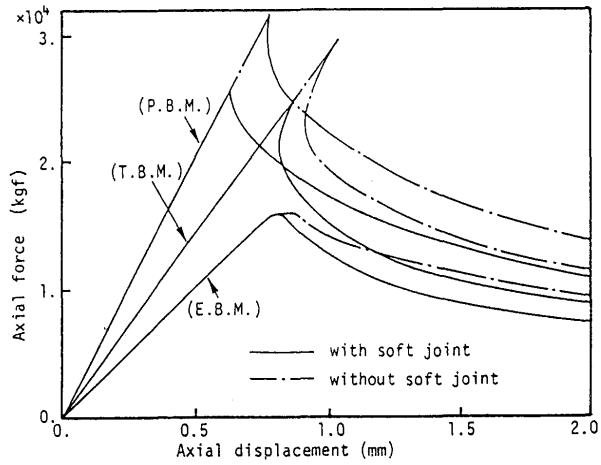

Fig. 17 Load-displacement curves of columns with soft joint at center ($H/t=1$, $w_0=t/1000$).

Table 2 Relative strength of plate with soft joint compared to homogeneous plate computed by FEM and idealized model ($w_0=t/1000$)

	s. s.	s. s.	s. s.	clamped	s. s.
E.B.M.	0.997 (1.000)	0.939 (0.949)	0.980 (0.941)	0.976	0.861
T.B.M.	0.973 (0.987)	0.862 (0.924)	0.913 (0.916)	0.915	0.815
P.B.M.	0.982 (0.982)	0.925 (0.924)	0.923 (0.912)	0.924	0.800

	γ	b (mm)	t (mm) simply s.	t (mm) clamped
E.B.M.	2.0	2000.	45.91	28.93
T.B.M.	1.0	2000.	64.92	40.92
P.B.M.	0.5	2000.	91.81	57.87

the compressive force is applied to the plate in the same direction as the joint, the reduction of ultimate strength is negligibly small.

4.2 Boundary condition

When the strength of structural components is dealt with, the condition of continuity to the adjacent components is very influencial. Concerning one-dimensional members, such as columns, beams, this is considered as the degree of fixity at both ends.

When the strength of a plate element in a plated structure is dealt with, the boundary condition is one of the most influencial factors. As boundary conditions, the restraining conditions against the middle-plane deformation and rotation of a plate are separately considered.

Plate elements furnished in ship and offshore structures are continuous to the surrounding ones. Therefore, the behavior of a plate element in those structures should be dealt with as one in the continuous structure and not as a single separate plate. The boundary of an element is supposed to keep straight by in-plane constraine and if the plate is not surrounded by strong stiffeners, the boundary is straight but movable paralled to the line before loading. This implies that stresses induced along the boundary is not necessarily uniform under this loading condition.

The compressive behavior of a simply supported square plate is analyzed by FEM being changed the boundary condition of the middle plane as

(1) restrained: the edge of a plate is straight and does not move.
(2) constrained: the edge of a plate is straight but movable.
(3) unrestrained: the edge of a plate is free to move.

the results of analysis are shown in **Fig. 18**[10].

For thicker plate, the ultimate strengths for the boundary conditions being constrained and unrestrained are very close. For thin plate, the ultimate strengths under the boundary conditions being restrained and constrained are not so much different.

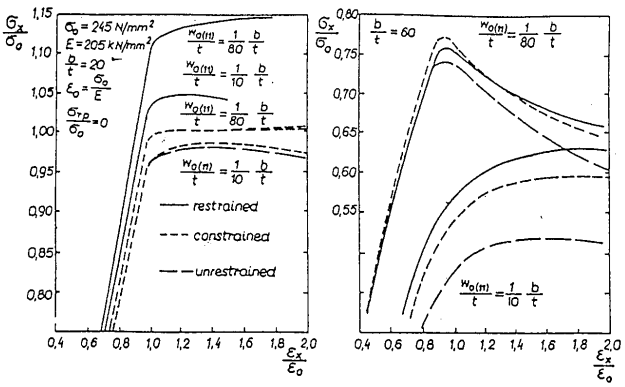

Fig. 18 Load-carrying capacity of simply supported square plates, effect of boundary conditions of the middle planes on the plates.

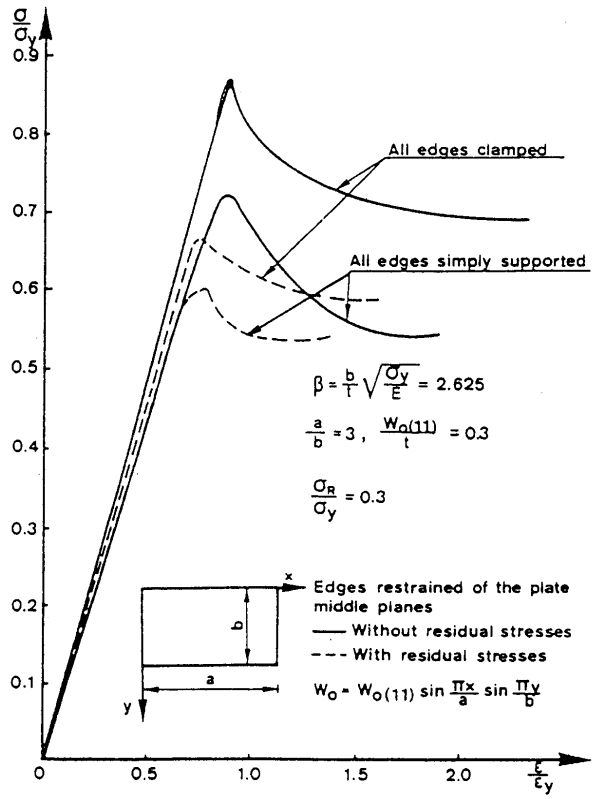

Fig. 19 Effect of boundary conditions on load carrying capacity of plates.

As for rotation along the boundary, a plate element is simply supported, fixed or restrained with a certain defree of fixity, depending upon the mode of deflection of the plate element and the adjacent plates.

For two extreme cases where a plate is clamped and restrained, and simply supported and unrestrained, the ultimate strength of a square plate is analyzed and the results are shown in **Fig. 19**.

4.3 Initial deformation of rectangular plates under transverse compression

Plate panels in transverse system are accompained by similar initial defromation as those in longitudinal system. When these panels are subjected to transverse compression, stiffness and strength depend critically on the relative form of initial deformation in adjacent plate panels[12].

In the case of symmetric distortion, initial deformations grow symmetrically until the buckling load is almost reached and then snap into an antisymmetric configuration, while in the case of antisymmetric initial distortion deformation remains antisymmetric throughout the load range and failure occurs relatively gradually but with a much greater reduction of stiffness

and strength. It is clear from these results that correct evaluation of characteristic plate strength requires statistical assessment not just of plate distortion amplitudes but also of the relative form of distortion in adjacent plate panels.

4.4 Damages caused by hydrodynamic overloas (as might be caused by slamming of underwater explosions)

For subsequent application of lateral load, the residual strength and stiffness of such damaged platings would be lost little[13].

In plates of aspect ratio $a/b>2$, single lobe damage deformations will only slightly reduce and may increase plate strength under longitudinal compression. The same effect has been discussed at strength of plate with initial deflections.

In contrast with this, when in-plane load applied in shorter direction, the damages of this type are likely to induce more significant loss of stiffness and strength.

4.5 Localized imperfection

The effect of over-all initial deflection of a long rectangular plate has been investigated extensively. Localized initial deflections are often observed in marine structures, which also influence stiffness and strength of plates.

Localized imperfection effect can be interpreted referring to changes of the behavior of plates according to b/t: As has been described in 3, a long plate with initial deflection under longitudinal compression reaches the ultimate strength after loss of stiffness due to large deflection in the case of larger b/t, and by loss of strength due to expansion of localized plastic zone in the case of smaller b/t, although the deflection is small.

According to **Fig. 20**[14] the localized effect is not very sensitive to dent shape. Isolated sinusoidal dents of moderate amplitude influence plate strength only slightly less than ripple distortions having the same amplitude and wavelength. A marginally greater loss of strength is caused by an isolated sinusoidal dent of length 0.8 b than others. The location of isolated dent influences slightly the loss of compressive strength of a long plate. The imperfection effect is marginally greater when the dent is located close to a plate end.

Localized initial deformation caused less precollapse loss of plate stiffness and leads to failure at a lower compressive strain with more rapid post-collapse unloading than ripple distortion of the same amplitude.

Addition of a localized imperfection of moderate amplitude to the over-all distortion of case 1 causes loss of strength.

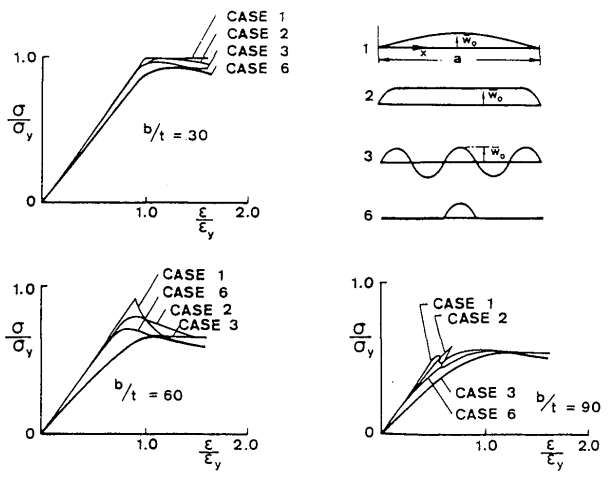

Fig. 20 Comparison of load-end shortening curve for long plates ($a/b=4$) with over-all, periodic and localized distortion.

4.6 Longitudinal stiffeners

When long plate reinforced by longitudinal stiffeners are subjected to longitudinal compression, longitudinal stiffeners (flat-bar stiffeners) increase plate strength particularly at higher b/t since the stiffeners are effective to restrain especially large deflection of the plate[14].

Even in the case of longitudinally stiffened plate, over-all or localized initial distortion of panel plates has approximately the same effect on the behavior of panel plates as periodic distortion of equal amplitude at all values of b/t.

In plates with low b/t, the shape of initial deformation remains the same, since bending deformation does not increase.

4.7 Lateral load

In-plane compressive stiffness and strength of re-

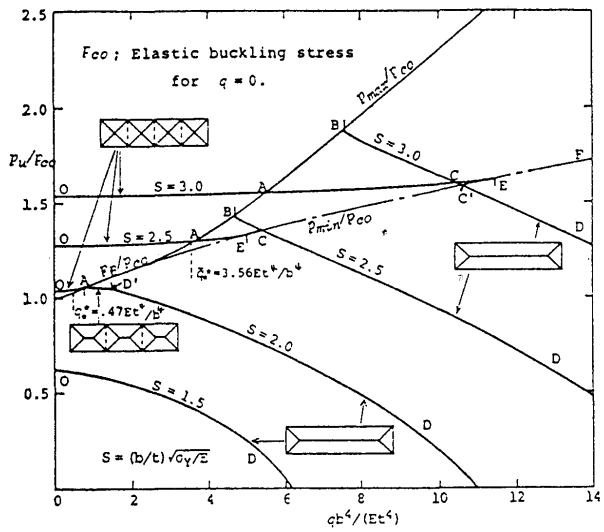

Fig. 21 Relation between compressive strength p_u and hydrostatic pressure q for various plate parameter $S=(b/t)\sqrt{\sigma_y/E}$ (simply supported plates, $\alpha=4$).

ctangular plates are influenced by lateral load. Lateral load may be regarded as imperfection of loading.

Theoretical and experimental studies of plate strength under combined compression and lateral pressure are described in[15-17]: as illustrated in **Fig. 21**[17] it was found that the compressive strength of thick rectangular plates is strongly affected by hydrostatic load while the compressive strength of thin plates is only slightly affected by lateral pressure. In the case square plates compressive strength is substantially reduced by lateral pressure at all thickness.

References

1) Y. Ueda, K. Fukuda and K. Nakacho: Basic Procedure in Analysis and Measurement of Welding Residual Stresses by the Finite Element Method, Int. Conf. on "Residual Stresses in Welded Construction and Their Effects", November 1977, The Welding Institute, pp. 27–37.
2) F. Nishino: Buckling Strength of Columns and Their Component Plates, Ph. D. Disseration, Lehigh Univ., 1962.
3) Y. Ueda, W. Yasukawa, T. Yao, H. Ikegami and R. Ohminami: Effect of Welding Residual Stresses and Initial Deflection on Rigidity and Strength of Square Plates Subjected to Compression (Report I), Trans. of JWRI (Welding Research Institute, Osaka University), Vol. 4, No. 2, 1975, pp. 29–43 and Jl. Society of Naval Architects of Japan, Vol. 137, 1975, pp. 315–326 (in Japanese).
4) Y. Ueda and L. Tall: Inelastic Buckling of Plates with Residual Stresses IABSE, Zürich, 1967.
5) Y. Ueda and T. Yao: The Influence of Complex Initial Deflection Modes on the Behaviour and Ultimate Strength of Rectangular Plates in Compression, Journal of Construct. Steel Research, Vol. 5, No. 4, 1985, pp. 265–302.
6) Y. Ueda, T. Yao and K. Nakamura: Compressive Ultimate Strength of Rectangular Plates with Initial Imperfection due to Welding (1st Report) —Effects of the Shape and Magnitude of Initial Deflection—, Jl. Society of Naval Architects of Japan, Vol. 148, 1980, pp. 222–231 (in Japanese).
7) T. Yao: Compressive Collapse Strength of Constructional Members of Ships, Doctrate Dessertation, Osaka Univ., 1980.
8) K. Satoh and M. Toyoda: Joint Strength of Heavy Plates with Lower Strength Weld Metal, Welding Journal, 54, 1975, 311s.
9) Y. Ueda, K. Murakawa and H. Kimura: Compressive Strength of Structural Elements with Lower Strength Weld Metal, to be submitted to Jl. of the Japan Welding Society.
10) C. Guede Soares and T. H. Soreide: Behaviour and Design of Stiffend Plates under Predominantly Compressive Loads, Int. Ship. Progress, No. 341, 1983.
11) M. Kmiecik and A. Jazukiewicz: Effect of Boundary Conditions, Initial Stresses and Initial Deflections on the Load-carrying Capacity of Plates under Uniaxial Compression, Budownictwo Okretowe, 10, 1984.
12) C.S. Smith: Imperfection Effects and Design Tolerances in Ships and Offshore Structures, Trans. Inst. Engrs. and Shipbuilders in Scotland, Vol. 124, 1981.
13) C.S. Smith and R.S. Dow: Residual Strength of Danaged Steel Ships and Offshore Structures, J. Construct. Steel Research, Vol. 1, No. 4, 1981.
14) R.S. Dow and C.S. Smith: Effects of Localized Imperfections on Compressive Strength of Long Rectangular Plates, J. Construct. Steel Research, Vol. 4, 1983.
15) Y. Fujita, T. Nomoto and O. Niho: Ultimate Strength of Rectangular Plates Subjected to Combined Loading (2nd Report) —Rectangular Plates under Compression and Lateral Pressure, J. Soc. of Nav. Arch. of Japan, Vol. 146, 1979.
16) H. Okada, K. Oshima and Y. Fukumoto: Compressive Strength of Long Rectangular Plates under Hydrostatic Pressure, J. Soc. of Nav. Arch. of Japan, Vol. 146, 1979.
17) H. Okada, K. Oshima and Y. Fukumoto: Compressive Strength of Long Rectangular Plates under Hydrostatic Pressure (2nd Report) —A Case of In-Plane Constraint in the Transverse Direction—, J. Soc. of Nav. Arch. of Japan, Vol. 148, 1980.