AN EVIDENCE FOR THE CONTRIBUTION OF ANAMMOX PROCESS IN NITROGEN REMOVAL FROM GROUNDWATER

Cao The Ha[1], Le Van Chieu, Kieu Anh Trung[1], Cao The Anh[1], Pham Trung Quan[1],

Kenji Furukawa[2], Pham Khac Lieu[2], Takao Fujii[3]

[1]*Research Center for Environmental Technology and Sustainable Development (CETASD),*

Hanoi University of Science (HUS), Vietnam National University, Hanoi (VNU HN), Vietnam

[2]*Faculty of Engineering, Kumamoto University, Japan*

[3]*Faculty of Engineering, Sojo University, Japan*

1. Introduction - problem

In Vietnam groundwater contributes 30% of total supplied water, but in some areas groundwater is contaminated by N-ammonium. For example, Hanoi – VN capital City is the only City in VN, which is uses exclusively only groundwater for all purposes, but 4 of 10 its water plants have N-ammonium problem, among them Phap Van water plant has the highest average value of 20 mg N-ammonium per liter. To remove N-ammonia from drinking water to meet National Standards, that are corresponding with WHO guidelines of 1.5 mg ammonium (< 1.17 mg N/L) and 50 mg nitrate per liter (< 11.3 mg N/L) [MoH-VN, 2002; WHO, 1993], there are some options like breakthrough chlorination, air stripping, ion exchange etc. [WEF, 1998], among them biological N-removal is the most attractive.

According to conventional biological N-ammonium removal N-ammonium is first oxidized into N-nitrate by autotrophs *Nitrosomonas* and *Nitrobacter*, then nitrogen from N-nitrate is removed by reduction into N_2 gas by heterotrophic *denitrifiers* that require organic carbon source as co-substrate.

Because of high 20 mg N-ammonium/L in raw groundwater, if only nitrification is applied, then theoretical nitrate content would be 88.6 mg/L, that is larger than permitted value of 50 mg/L, in this case N-removal technology must consist of at least two steps: 1- nitrification and 2- denitrification and *total nitrogen (TN) removal must get at least 38.6mg/L as nitrate or 8.5 mg N/L (> 42.5%).*

In the case of drinking water treatment due to low substrates level slow bacteria growth rate was expected, therefore bacteria-carrying material was applied for biomass attachment. Hence, biological submerged biological filters were technique of choice.

Actually our pilot facility consisted of three steps with addition of step 3- post-aeration to remove any residual N-ammonia or organics from the two first.

Our field tests of nitrification denitrification and post-aeration reactors were conducted in more than one year. The most interesting results were achieved with denitrification reactor.

As a rule, denitrification follows equations. [WEF, 1998, except equation (2)]:

$$6NO_3^- + 5CH_3OH \rightarrow 3N_2 + 5CO_2 + 7H_2O + 6OH^- \quad (1)$$

$$12NO_3^- + 5C_2H_5OH \rightarrow 6N_2 + 10HCO_3^- + 9H_2O + 2OH^- \quad (2)$$

$$8NO_3^- + 5CH_3COOH \rightarrow 4N_2 + 10CO_2 + 6\,H_2O + 8OH^- \quad (3)$$

In this case some organic carbon in the form of acetate/or ethanol was added, then COD/N-NO_3^- ratio must equal 2.86. Actually values less than cited one were received; in addition we revealed that a part of N-ammonium was also removed along with nitrite formation. In this case along with conventional denitrification the involvement of ammonium removal via oxidation by nitrite was proposed [Strous et al., 1999]:

$$NH_4^+ + 1.32NO_2^- + 0.066HCO_3^- + 0.13H^+ \rightarrow 1.02N_2 + 0.26NO_3^- + 0.066\text{Biomass} + 2.03H_2O \quad (4)$$

This process was called *anammox*. To prove the existence of anammox process in parallel with conventional denitrification 16S rDNA analysis was applied.

2. Methods and materials

Groundwater

It was Hanoi - Phap Van plantsground water that is taken from wells of 50-70 meters deep. One-year average analytical data were given in table 1.

Table 1. Raw groundwater characteristics

pH	*T, °C*	*Alk*	*Fe total*	Fe^{2+}	NH_4^+-*N*	NO_2^-*N*	NO_3^--*N*	*TN*
6,5-7,0	20-28	332,0	9,6	7,4	20,9	0,02	0,3	21,7
COD_{Mn}	COD_{Cr}	*DOC*	$P\text{-}PO_4^{3-}$	*CD, µS*	*Mg*	*Ca*	Cl^-	SO_4^{2-}
3,4	16,7	3,1	0,2	110,4	14,5	29,6	30,4	0,75

Note: all parameters were given in unit of mg/L, except pH, temperature, conductivity.

Denitrification Reactor (DeNR)

Characteristics of DeNR were given in table 2.

Table 2. DeNR characteristics

Parameter	*Symbol*	*Value*
Inner diameter, mm	d	1184
Total height, mm	H_B	5000
Height of biomass-carrying material, mm	h_M	3400
Supernatant deep, mm	h_w	500
Filtering area, m^2	S	1.10
Volume of biomass-carrying material, m^3	V_K	3.74

Note: Biomass carrying material was porous (about 50% porosity) artificial mineral keramzite, that was described elsewhere [**Cao The Ha,** 2001].

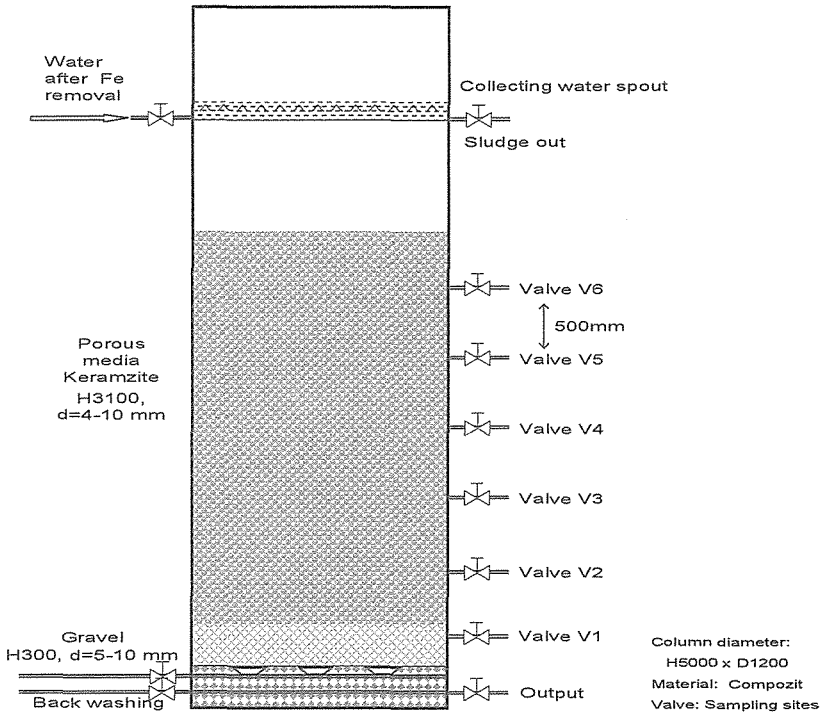

Figure 1. Scheme of Denitrification Reactor (DENIR)

Analysis – Data Treatment

Chemical analysis was done in accordance with standard methods for ammonium-N, nitrite-N and nitrate-N [APHA, 1995]. Preliminary results showed that organics nitrogen content was insignificant, therefore total nitrogen (TN) can be considered as the sum of three above mentioned inorganic nitrogen compounds.

16S rDNA analysis was done at Sojo University, Japan.

3. Results and discussions

Chemical Analysis of Influent's and Effluent's N-compounds Content

Running data and results of chemical analysis were given in table 3 and figure 2.

Table 3. Results of chem. analysis of DeNR at different filtration rates

Flow (m^3/h)	*2.5*	*30.0*	*3.5*	*4.0*	*5.0*
Flow (m^3/d)	60	72	84	96	120
Filtration rate (m/h)	2.27	2.73	3.18	3.63	4.54
Real hydraulic retention time(h)	1.02	0.85	0.73	0.64	0.51
NO_3^--N in (mg N/L)	12.42	8.15	9.06	7.03	6.02
NO_3^--N out (mg N/L)	0.85	1.78	2.34	1.44	2.6
NH_4^+-N out (mg N/L)	4.41	7.9	8.02	7.6	10.1
TN in (mg N/L)	18.34	19.3	20.31	17.93	17.22
TN out (mg N/L)	5.26	13.07	10.36	9.04	12.7
NO_3^--N loss (mg N/L)	11.57	9.97	6.72	5.59	3.42
NH_4^+-N loss (mg N/L)	1.51	1.43	3.23	3.3	1.1
TN loss (mg N/L)	13.08	9.58	9.95	8.89	4.52
NO_3^--N removal rate (g N/m^3.d)	185.54	156.83	150.87	143.43	109.69
NH_4^+-N removal rate (g N/m^3.d)	24.21	27.52	72.52	84.67	35.28
TN removal rate (g N/m^3.d)	209.75	184.35	223.38	228.10	144.97
% removal NO_3^--N	93.2	81.7	74.2	79.5	56.8
% removal NH_4^+-N	25.5	15.3	28.7	30.3	9.8
% removal TN	71.3	49.6	49.0	49.6	26.2

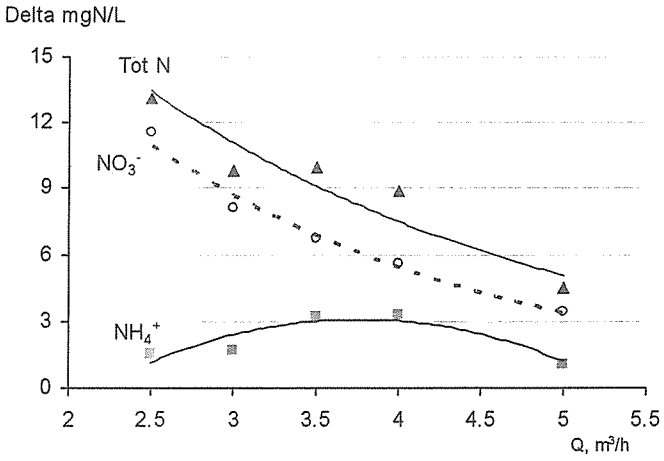

Figure 2. Dependence of nitrogen losses (Delta-mgN/L) on flow rate

From Fig. 2 one can note that in the range of studied flow rates the nitrogen loss was observed in all cases, total N loss always was larger than nitrate-N loss, it was due to ammonia-N loss. From these data one can also extract useful information for actual reactor design. For example the best range for DeNR was at flow rates between 3-4 m/h.

Chemical Analysis along The Flow in DENIR

Results of chemical analysis along the deep of filtering bed were given in table 4 and figure 3.

Table 4. Results of chem. analysis of N-compounds along DeNR at flow of 3 m^3/h

Run	10/1	13/1	13/1	14/1	Average (mgN/L)
NH_4^+-N changes along DeNR (mg N/L)					
Influent	7.06	11.55	12.02	9.56	10.05
On material surface	8.33	10.91	12.18	9.21	10.16
Valve 6	8.37	10.48	11.75	10.12	10.18
Valve 5	7.26	10.36	11.43	9.52	9.64
Valve 4	7.00	10.00	11.71	9.13	9.46
Valve 3	6.63	10.24	11.47	8.77	9.28
Valve 2	6.39	10.00	11.11	8.25	8.94
Valve 1	6.39	9.88	11.03	7.90	8.80
Effluent	6.29	9.88	10.83	7.90	8.73
Difference (In-Eff)	0.77	1.67	1.19	1.66	**1.32**
NO_2^--N changes along DeNR (mg N/L)					
Influent	0.02	0.12	0.17	0.21	0.13
On material surface	0.27	0.16	1.92	0.38	0.68
Valve 6	1.61	0.52	2.43	1.44	1.50
Valve 5	1.45	0.35	1.22	1.52	1.13
Valve 4	1.30	0.06	0.26	1.37	0.75
Valve 3	0.54	0.01	0.05	1.09	0.43
Valve 2	0.08	0.01	0.31	1.02	0.36
Valve 1	0.02	0.00	0.03	0.71	0.19
Effluent	0.08	0.08	0.04	0.22	0.10
NO_3^--N changes along DeNR (mg N/L)					
Influent	12.74	8.52	10.17	13.75	11.29
On material surface	8.75	7.61	6.37	11.73	8.61
Valve 6	6.37	6.41	4.58	8.25	6.40
Valve 5	4.63	2.70	4.44	6.64	4.60
Valve 4	4.31	1.15	2.15	4.79	3.10
Valve 3	4.42	1.10	1.99	3.89	2.85
Valve 2	4.40	1.12	2.22	3.73	2.87
Valve 1	4.19	0.85	2.18	3.62	2.71
Effluent	4.67	0.80	2.20	2.93	2.65
Difference (In-Eff)	8.07	7.72	7.97	10.82	**8.64**
TN changes along DeNR (mg N/L)					
Influent	19.82	20.19	22.37	23.52	21.47
On material surface	17.36	18.67	20.47	21.32	19.45
Valve 6	16.35	17.41	18.76	19.81	18.08
Valve 5	13.34	13.41	17.09	17.69	15.38
Valve 4	12.61	11.21	14.12	15.28	13.30
Valve 3	11.59	11.35	13.51	13.76	12.55
Valve 2	10.87	11.14	13.64	13.00	12.16
Valve 1	10.60	10.73	13.24	12.22	11.70
Effluent	11.05	10.76	13.08	11.05	11.48
Difference (In-Eff)	8.77	9.43	9.29	12.47	**9.99**

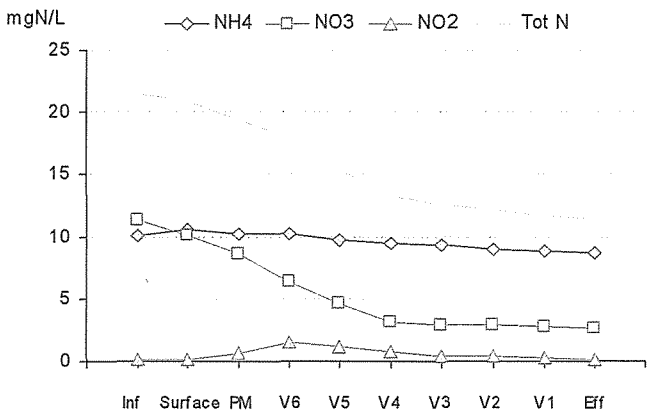

Figure 3. N-concentration profiles along DR

16S rDNA Analysis

Achieved results were shown in table 5.

Table 5. Result of 16S rDNA analysis

The germ whose homology is high	Homology
Uncultured planctomycetales bacterium (AB176696.1)	95 %
Uncultured anoxic sludge bacterium KU1 (AB054006.1)	94 %
Candidatus brocadia Anammoxidans (AF375994.1)	94 %

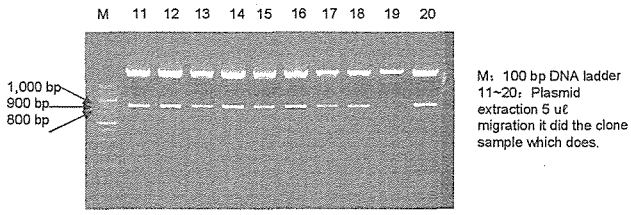

Insertion check of figure 4 latter half part

Discussion and Proposal

Table 1 showed that Phap Van – Hanoi groundwater is heavily contaminated by NH_4^+-N, this was the highest value among ten Hanoi water plants, beside Fe content, mostly Fe (II) was also high. The advantage was the high value of alkalinity (332 mg HCO_3^-/L) and temperature (20-28 °C); these are favor for biological processes in general, and consuming alkalinity (eqn.5) nitrification in particular.

$$1.02NH_4^+ + 1.89O_2 + 2.02HCO_3^- \rightarrow 0.021C_5H_7O_2N + 1,0NO_3^- + 1.92H_2CO_3 + 1.06H_2O \quad (5)$$

Due to the high Fe content all biological N-removal units were applied after Fe-removal by aeration-rapid sand filter. Concentration of all three N-parameters (Table 3 and Fig. 2) showed that to meet TN content requirement of 50 mg /L as nitrate-N the hydraulic loading or flow rate must be less than 4 m^3/h. This value is close to that of conventional rapid sand filter (5-8 m^3/m^2.h), that showed high efficiency of our technology.

Results of chemical analysis along DENIR in Table 4 and Fig. 3 gave multiple conclusions.

The first was: most of N removed, more than 80% TN, was due to conventional nitrate removal. Along with nitrate disappearance some amount of nitrite-N was formed, the maximum value was observed between valves 5 and 6 that were at the deep of 0.9-1.4 meter of biomass-carrying/or filtering material from the surface of porous material bed. That was that nitrate was reduced into N-gas, and there was some accumulation of nitrite.

The second was: along with nitrate reduction ammonium-N was also removed in the extent of more than 10%. The removal was most significant from the point of maximum nitrite accumulation in DENIR.

The third was that ammonium-N removal rate was proportional to nitrite-N removal rate, the ratio of the rate of ammonium-N removal: rate of nitrite-N removal was 0.89; this value was close to that of theoretically calculated from (equation 4) value of 0.76. Some deviation may due to impossibility of calculation of continuous conversion of nitrite by conventional denitrification that brought some increase in this value.

The evidence of anammox was also confirmed by results of 16S rDNA analysis.

The existence of a new anammox bacterium was revealed from 16S rDNA analysis. The retrieved sequence had 95% similarity with uncultured planctomycetales bacterium (AB054006.1) and 94% similarity with both uncultured anoxic sludge bacterium KU1 (AB176696.1) and candidatus brocadia Anammoxidans (AF375994.1). This was thought that our sample contained a new Anammox germ. It was that in the sludge taken from DENIR, which treats Hanoi groundwater, one can conclude that the Anammox has groundwater origin and is different from the other groups of Anammox germs exist.

Summarizing all above mentioned allowed us to propose that there were at least two parallel N-removal processes: conventional one via nitrate reduction and a new anammox process. Therefore, proposed N-removal scheme was:

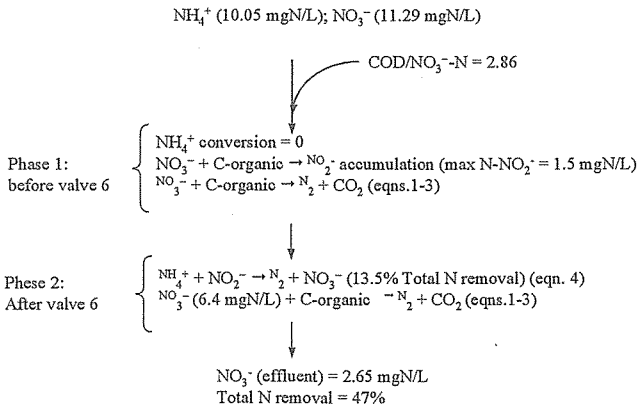

Thus, based on these results and results from a new single tank process for ammonium removal from drinking water was also proposed (Fig.4).

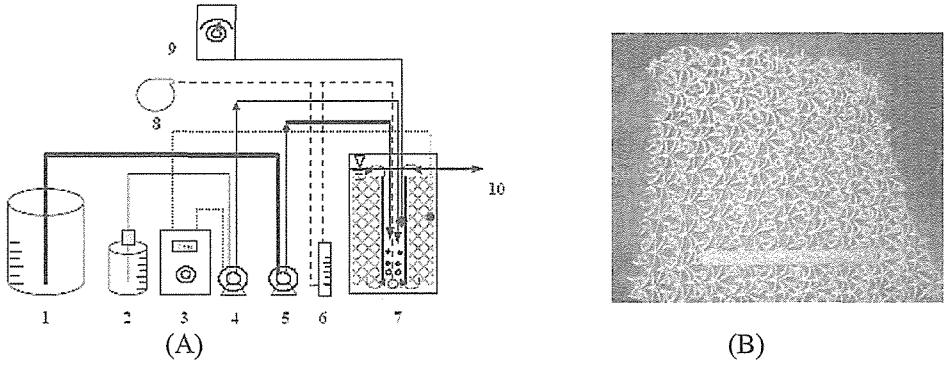

Figure 4. Proposed scheme of SNAP process for ammonium removal from drinking water
(A) 1. Influent tank; 2. $NaHCO_3$ solution; 3. pH controller; 4. $NaHCO_3$ pump; 5- Influent pump; 6. Airflow meter; 7. SNAP Reactor; 8. Air pump; 9. Heater; 10. Effluent
(B) Acrylic fiber material for bacterium attachment

The important figure of this process is the biomass-carrying material. It was proved that acrylic fiber in the form of net (Fig. 4B) was well suited. In combination with micro-membrane filtration we can create a new compact facility for N-ammonia removal process [Furukawa et al., 2005].

In this case the following advantages will be achieved: Saving energy for aeration as compare to total nitrification; Elimination of C-organic source usage, therefore less secondary contamination threat; absolutely good biomass retention, and excellent water quality by using micro-membrane filtration.

The reactor design would be most compact, therefore less space is required.

4. Conclusions

Outputs of our research are:

1. Reactor design parameters were determined;
2. Proposal for a procedure of easy identification of anammox process without expensive and complicated DNA analysis;
3- Proposal for a novel N-ammonium removal process with less energy and organics consumption than conventional N- ammonium pathway.

Acknowledgement

The authors thank a lot to Hanoi Environment Program 01C-09, Hanoi DoSTE, especially Hanoi Water Works, and also ESTNV II/SDC supported Project for financial support this work.

Literatures

1. Ministry of Health – SRV. *Decision on the quality of sanitary supplied water No 1329/2002*. Hanoi 2002.
2. WHO. *Guidelines on quality of drinking water (in Vietnamese)*. WHO, Geneva, 1993.
3. WEF. *Biological and Chemical Systems for Nutrient Removal,* WEF, 1998.
4. Strous M, Kuenen JG& Jetten MSM (1999). *Key physiology of anaerobic ammonium oxidation.* Appl. Environ. Microbiol. 65, 3248-3250.
5. Cao The Ha et al. *Biomass growing procedure and selection of carrier material for submerged aerated biofilter for nitrogen removal from Hanoi drinking water.* Report at CUP Symposium on groundwater contamination, Hanoi June 2001.
6. APHA. *Standard Methods for the examination of water and wastewater*, APHA 1995.
7. Konrad Egli, Urs Fanger, Pedro J.J. Alvarez, Hansruedi Siegrist, Jan R. van der Meer, Alexander J.B. Zehnder. *Enrichment and characterization of an anammox bacterium from a rotating biol. contactor treating ammonium-rich leachate.* Arch. Microbiol. (2001) 175: 198–207.
8. Emilie Lyautey, Benedicte Lacoste, Loıc Ten-Hage, Jean-Luc Rols, Fre'de'ric Garabetian. *Analysis of bacterial diversity in river biofilms using 16S rDNA PCR-DGGE: methodological settings and fingerprints interpretation.* Water Research 39 (2005) 380–388.
9. Furukawa K., LIEU P.K. et al. *Single-Stage Nitrogen Removal Using Anammox and Partial Nitritation (SNAP) Process and its Application to Treatment of Synthetic Landfill Leachate.* Proceedings Sardinia 2005, *Tenth International Waste Management and Landfill Symposium* S. Margherita di Pula, Cagliari, Italy; 3 - 7 October 2005. Published by CISA, Environmental Sanitary Engineering Centre, Italy.