Craggs, R. and Nagase, T.
Osaka J. Math.
19 (1982), 677-693

ON THE SIGNATURE OF INVOLUTIONS ON AN ORIENTED CLOSED 3-MANIFOLD

ROBERT CRAGGS AND TERUO NAGASE[1)]

(Received September 24, 1980)

0. Introduction

Browder and Livesay defined a signature of a fixed point free involution on a homotopy n-sphere by using a $\left[\frac{n-3}{2}\right]$-connected characteristic $(n-1)$-submanifold [BL]. For $n=3$, their definition is available for homology 3-spheres and connected characteristic surfaces [Md]. Unfortunately, this invariant does not generalize to involutions with non-empty fixed point sets. The problem is that the signature depends upon the choice of the characteristic surface.

In §2 we give a generalization of Browder-Livesay signature for an involution with non-empty fixed point set whose components are 1-spheres and homologous to zero in the orbit space.

For the case that the orbit space is homeomorphic to S^3 and the orbit of the fixed point set is a link ι in S^3, Murasugi showed that $\xi(\iota), =\sigma(\iota)+\Sigma lk(\iota_i: \iota_j)$, is invariant, where $\sigma(\iota)$ is Murasugi signature [Mr-2]. We show the following theorem in §3:

Theorem. *The signature of the involution is* $\xi(\iota)$.

Further for each link in a homology 3-sphere (furthermore for any closed orientable 3-manifold in which each component of the link is homologous to zero), we define a signature for the link which is an extension of the signature of a link in S^3.

Fukuhara defines a signature for an involution on a homology 3-sphere by means of Hirzebruch's formula about the signature of ramified coverings [Fk]. In §4 we show a construction for producing a 4-manifold starting from an involution on a homology 3-sphere whose signature is equal to our signature of the involution. This construction is based on Craggs's theory on triadic 4-manifolds [Crg-1], [Crg-2]. Finally we show that our signature is also an extension of Fukuhara's signature.

---

1) The partial results in this article are contained in the second author's Ph. D. thesis written at the University of Illinois under the direction of Professor R. Craggs.

1. Preliminaries

We work in the piecewise linear category.

Maps are all piecewise linear maps. The interior, closure, and boundary of $(\cdots)$ are denoted by $\mathrm{Int}(\cdots)$, $Cl(\cdots)$, and $\partial(\cdots)$ respectively. The term *loop* means a simple closed curve.

Throughout this paper we assume that M is a fixed oriented closed 3-manifold and $f: M \to M$ is a fixed orientation preserving involution such that the fixed point set $\mathrm{Fix}(f)$ consists of n mutually disjoint loops $S(1), \cdots, S(n)$. For a subset A of M, A/f denotes the orbit space of the set A.

A closed surface G in M is a *CH-surface* provided that (1) the surface G is an invariant set for f, i.e. $f(G)=G$, (2) the surface G separates M into two connected components, and the closure of each component is a handle body, and (3) the map f maps one component onto the other.

For each CH-surface G, we define as follows a *signature* of the map f with respect to G, and denote it by $\sigma_G(f: M)$: Let U be the closure of a complementary domain of G and let $\kappa = \mathrm{Ker}(i_*: H_1(G) \to H_1(U))$, where i_* is the homomorphism induced from the inclusion map $i: G \to U$. Let $B: \kappa \otimes \kappa \to \boldsymbol{Z}$ be the bilinear form defined by $B(x \otimes y) = x \cdot f_*(y)$, where $\cdot$ means the intersection number, and f_* is the isomorphism on $H_1(G)$ induced from the homeomorphism $f \mid G$. The signature $\sigma_G(f: M)$ is the signature of the bilinear form B.

Two CH-surfaces are *ss-equivalent* provided that one is obtained from the other by a finite sequence of Operation Γ_1 and Γ_2 and their inverses:

$\Gamma_1(G_1 \to G_2)$: There exists a homeomorphism $h: M \to M$ such that $h \circ f = f \circ h$ and $h(G_1) = G_2$.

$\Gamma_2(G_1 \to G_2)$: Let U be a handle body in M bounded by G_1. There exist two disks D_1 and D_2 in M such that

(1) the disk D_1 is a proper disk in U,
(2) the intersection $D_2 \cap U$ is ∂D_2,
(3) the intersection $D_1 \cap D_2$ consists of only one crossing point on G_1,
(4) the closure of a connected component of $U - G_2$ is a regular neighborhood of D_1 in U, say N,
(5) the set N does not meet with its image $f(N)$, and
(6) the surface G_2 is the boundary of the set $Cl(U-N) \cup f(N)$ (see Fig. 1.1).

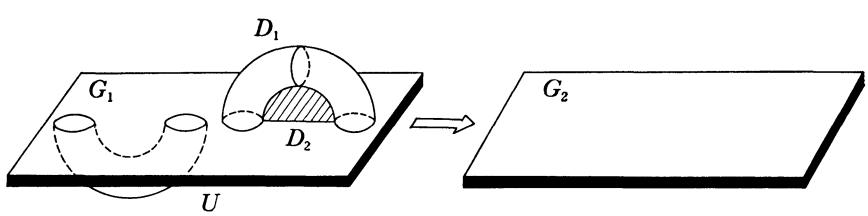

Fig. 1.1

The following theorem is shown in [Ng].

Theorem (ss-equivalence theorem). *Two CH-surfaces G_1 and G_2 are ss-equivalent if and only if there exists a homeomorphism $h: M \to M$ such that*

(1) $h \circ f = f \circ h$, *and*

(2) *the intersection $h(G_1) \cap G_2$ is a neighborhood of the fixed point set Fix(f) on G_2.*

We use the sign $\square$ to indicate the end of proofs.

2. Relating signatures to twisting numbers

In this section, we define twisting numbers of two CH-surfaces and get a formula relating the signatures to twisting numbers. At the end of this section, we define a signature of an involution such that each component of the fixed point set is homologous to zero in the orbit space.

Let G_1 and G_2 be CH-surfaces. We define as follows two kinds of twisting numbers: For each component $S(i)$ of the fixed point set Fix(f), let $T_i(1)$ and $T_i(2)$ be regular neighborhoods of $S(i)$ such that (1) $T_i(2) \subset \mathrm{Int}\ T_i(1)$, and (2) for $j=1, 2$, the intersection $T_i(j) \cap G_j$ is a proper annulus in $T_i(j)$ which is separated by $S(i)$. For $j=1, 2$, let $A_i(j)$ be the closure of one of the connected components of $T_i(j) \cap G_j - \mathrm{Fix}(f)$. Orientate the two annuli $A_i(1)$ and $A_i(2)$ so that the orientation of the loop $S(i)$ inherited from the annulus $A_i(1)$ is equal to the one from the annulus $A_i(2)$. Let L be the loop of the boundary of the annulus $A_i(2)$ different from $S(i)$. Let $m(i)$ be the intersection number of the oriented loop and the oriented surface A_1. We call the n-tuple $(m(1), \cdots, m(n))$ the *twisting number of G_2 with respect to G_i*, and denote it by $tw(G_2; G_1)$. Let $\tau(G_2; G_1) = \sum_{i=1}^{n} m(i)$. We call the number $\tau(G_2; G_1)$ the *total twisting number of G_2 with respect to G_1*.

Proposition 2.1. *Let G_1 and G_2 be CH-surfaces. Then they are ss-equivalent if $tw(G_2; G_1) = (0, \cdots, 0)$.*

Proof. Since $tw(G_2; G_1) = (0, \cdots, 0)$, there is an ambient isotopy of M/f that fixes Fix(f)/f and takes a neighborhood of Fix(f)/f in G_2/f onto a neighborhood of Fix(f)/f. Pull this isotopy back to an equivariant isotopy H_t of M fixing Fix(f), where equivariance of H_t means that $H_t \circ f = f \circ H_t$ for all t. The replacement $G_2 \to H_1(G_2)$ is then a Γ_1 operation. Therefore G_2 is ss-equivalent to G_1 by ss-equivalence theorem. $\square$

Let M' be an oriented closed 3-manifold and $f': M' \to M'$ be an orientation preserving involution on M' with Fix(f'), a disjoint union of 1-spheres. Let G and G' be CH-surfaces in M and M' respectively. We define as follows a sum of

the two CH-surfaces G and G' in the connected sum $M\#M'$. Suppose that B and B' are invariant 3-balls in M and M' respectively such that $B\cap G$ and $B'\cap G'$ are invariant proper disks in B and B' respectively, and $B\cap \mathrm{Fix}(f)$ and $B'\cap \mathrm{Fix}(f')$ are proper arcs in B and B' respectively. Now B and B' possess the orientations inherited from M and M' respectively. Let $h: B\to B'$ be an orientation reversing homeomorphism with $f'\circ h=h\circ f$, $h(B\cap G)=B'\cap G'$, and $h(B\cap \mathrm{Fix}(f))=B'\cap \mathrm{Fix}(f')$. The homeomorphism h induces the connected sum $M\#M'$ of the 3-manifolds M and M', the connected sum $G\#G'$ of the surfaces G and G', and the sum $f\#f'$ of the two maps which is an orientation preserving involution on $M\#M'$. We call this surface $G\#G'$ a *sum* of the two CH-surfaces G and G' in the manifold $M\#M'$ with respect to the involution $f\#f'$. Note that the sum depends only on the choice of the components of $\mathrm{Fix}(f)$ and $\mathrm{Fix}(f')$ identified by h.

Let Σ^3 be the standard oriented 3-sphere and g the standard orientation preserving involution on Σ^3. Then $\mathrm{Fix}(g)$ is an unknotted 1-sphere in Σ^3. For each $\eta=\pm 1$, let $X(\eta)$ be a CH-surface, which is a torus, in Σ^3, with $\sigma_{X(\eta)}(g:\Sigma^3)=\eta$ (see Fig. 2.1).

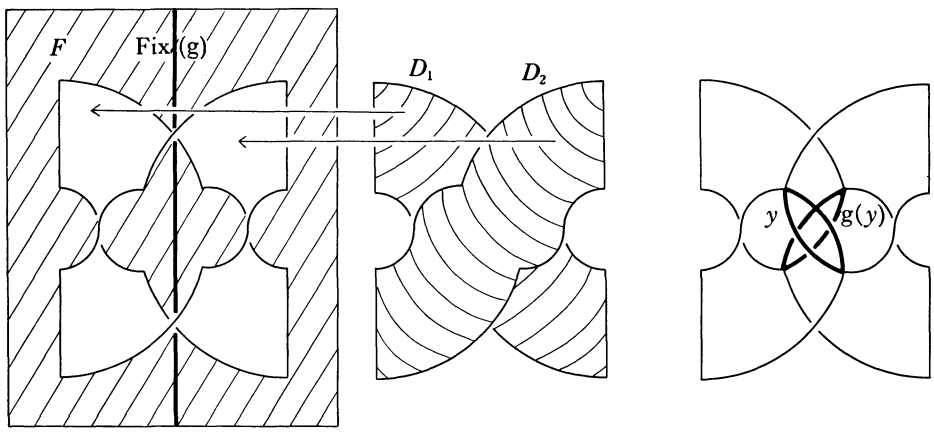

Here S^3 is considered as the one-point compactification of R^3. For (X,Y,Z), $g(X,Y,Z)=(-X,-Y,Z)$, $g(\infty)=\infty$. Hence $\mathrm{Fix}(g)$ is the union of the Z-axis and the point ∞. Now $X(+1)$ is the union of the YZ-plane and the point ∞ except in a 3-ball B. In the 3-ball, the intersection of the 3-ball and $X(+1)$ is the union of F and two disks D_1 and D_2. The intersection number of y and $g(y)$ is $+1$.

Fig. 2.1

We define Operation Γ_3 on the set of CH-surfaces in M:

$\Gamma_3(G_1\to G_2)$: There is a homeomorphism $k: M\to M\#\Sigma^3$ with $(f\#g)\circ k=k\circ f$, $k|(M-B)=id$, and $k(G_2)=G_1\#X(\eta)$, where B is the 3-ball to define the connected sum.

We denote G_2 by $G_1\#X(\eta)$. Then $G_1\#X(\eta)$ is unique up to Operation Γ_1.

Proposition 2.2. *Let $G_2=G_1\#X(\eta)$. Then we have*

$$\sigma_{G_2}(f\colon M)=\sigma_{G_1}(f\colon M)+\eta\,.$$

Proof. Suppose that Operation $\Gamma_3(G_1\to G_2)$ is taken place in a 3-ball B in M. Then $G_1-B=G_2-B$. Let U_1 and U_2 be handle bodies such that (1) for each $i=1, 2$, the surface G_i bounds U_i, and (2) $U_i-B=U_2-B$. Then there is a loop x on $G_2\cap B$ such that the loop x represents a non-trivial element of $\kappa=\mathrm{Ker}(i_*\colon H_1(G_2)\to H_1(U_2))$ and $x\cdot f_*(x)=\eta$ (see Fig. 2.1). Then there are mutually disjoint loops $\{y_k\}_k$ on G_2-B such that they represent non-trivial elements of κ and that $\{y_k\}_k$ represents a generating set of $\mathrm{Ker}(i_*\colon H_1(G_1)\to H_1(U_1))$, when we consider that each y_k lies in G_1. It is clear that $x\cdot f_*(y_k)=0$ for all k. Therefore we have the result. $\square$

The following proposition can be shown easily.

Proposition 2.3. *Let $G_2=G_1\#X(\eta)$. Then we have*

$$\tau(G_2\colon G_1)=-\eta.\quad\square$$

Proposition 2.4. *Let G_1 and G_2 be CH-surfaces. Then $\sigma_{G_1}(f\colon M)=\sigma_{G_2}(f\colon M)$ provided that G_1 and G_2 are ss-equivalent.*

Proof. It is sufficient to check the case that G_2 is obtained from G_1 by Operation Γ_2. We use all the notations in the definition of Operation Γ_2. There are mutually disjoint loops $\{y_k\}$ on G_1 such that (1) each y_k misses $N\cup D_2$ and (2) $\{\partial D_1, f(\partial D_2)\}\cup\{y_k\}$ is a generating set for $\kappa=\mathrm{Ker}(i_*\colon H_1(G_1)\to H_1(U))$. Then it is clear that (all loops are considered as elements in $H_1(G_1)$)

(1) $y_k\cdot\partial D_2=f(\partial D_2)\cdot f(y_k)=0$ for all k,

(2) $y_k\cdot f(\partial D_1)=\partial D_1\cdot f(y_k)=0$ for all k,

(3) $\partial D_1\cdot\partial D_2=\varepsilon$ where $\varepsilon=\pm 1$, and

(4) $\partial D_1\cdot f(\partial D_1)=0$.

Hence the bilinear form on $\kappa\otimes\kappa$ has a matrix presentation with respect to the ordered basis $\{\partial D_1, f(\partial D_2), y_1, \cdots\}$ as shown below:

$$\left(\begin{array}{cc:ccc} 0 & \varepsilon & 0 & \cdots & 0 \\ \varepsilon & * & 0 & \cdots & 0 \\ \hdashline 0 & 0 & & & \\ \vdots & \vdots & & \mathrm{A} & \\ 0 & 0 & & & \end{array}\right)\quad \begin{array}{l}\text{where } * = f(\partial D_2)\cdot\partial D_2\,,\\ \qquad \mathrm{A}=(a_{kj}),\ \text{and}\ a_{kj}=y_k\cdot f(y_j)\,.\end{array}$$

Since the signature of the matrix $\begin{pmatrix} 0 & \varepsilon \\ \varepsilon & * \end{pmatrix}$ is zero and the signature of the matrix

A is equal to $\sigma_{G_2}(f\colon M)$, we have the result. $\square$

Theorem 1. *Let G_1 and G_2 be CH-surfaces. Then we have*

$$\sigma_{G_2}(f\colon M) = \sigma_{G_1}(f\colon M) - \tau(G_2\colon G_1)\,.$$

Proof. Let $tw(G_2; G_1) = (m(1), \cdots, m(n))$. Let $\eta(i) = m(i)/|m(i)|$. Let $F_0 = G_1$ and inductively for each $i = 0, 1, \cdots, n-1$, let $F_{i+1} = F_i \# X(\eta(i+1)) \# \cdots \# X(\eta(i+1))$, ($|m(i+1)|$ times connected summed on the component $S(i+1)$ of $\mathrm{Fix}(f)$).

Then $\sigma_{F_{i+1}}(f\colon M) = \sigma_{F_i}(f\colon M) + |m(i+1)| \times \eta(i+1)$ by Proposition 2.2

$$= \sigma_{F_i}(f\colon M) + m(i+1)\,.$$

Hence $\sigma_{F_n}(f\colon M) = \sigma_{F_0}(f\colon M) + \sum_{i=1}^{n} m(i)\,.$

Namely $\sigma_{F_n}(f\colon M) = \sigma_{G_1}(f\colon M) + \sum_{i=1}^{n} m(i)\,.$

Since $tw(G\colon F_n) = (0, \cdots, 0)$, the CH-surfaces, G_2 and F_n, are ss-equivalent by ss-equivalence theorem. Hence $\sigma_{G_2}(f\colon M) = \sigma_{F_n}(f\colon M)$ by Proposition 2.4.

On the other hand,
$\tau(F_{i+1}\colon F_i) = -\eta(i+1)|m(i+1)| = -m(i+1)$ by Proposition 2.3. Hence we have

$$\begin{aligned}\tau(F_n\colon F_0) &= \sum_{i=0}^{n-1} \tau(F_{i+1}\colon F_i)\\ &= \sum_{i=1}^{n} (-m(i))\\ &= -\sum_{i=1}^{n} m(i)\,.\end{aligned}$$

Thus

$$\begin{aligned}\sum_{i=1}^{n} m(i) &= -\tau(F_n\colon F_0)\\ &= -\tau(G_2\colon G_1)\,.\end{aligned}$$

Therefore we have the result. $\square$

DEFINITION. An involution $k\colon N \to N$ on a closed 3-manifold N is said to be *admissible* provided that for each connected component C of $\mathrm{Fix}(k)$, C/k is the boundary of an orientable surface in N/k.

Suppose further that $f\colon M \to M$ is admissible. For each CH-surface G, we define as follows a *self-linking number* of G along the component $S(i)$. Let L be a loop on $\mathrm{Int}(G/f)$ which is parallel to $S(i)/f$ on G/f and is oriented in the opposite direction from $S(i)$ on the annulus bounded by L and $S(i)/f$. Then we can define the linking number of $S(i)/f$ and L since they are homologous to zero in M/f. We call this number the *self-linking number* of G *along* $S(i)$, and denote it by $lk_i(G)$. Let

$$lk(G) = \sum lk_i(G)\,.$$

We call $lk(G)$ the *self-linking number* of G.

Theorem 2. *Suppose f is admissible. Then for any pair of CH-surfaces G and G', we have*

$$\sigma_G(f\colon M)+\frac{1}{2}\,lk(G)=\sigma_{G'}(f\colon M)+\frac{1}{2}\,lk(G')\,.$$

Proof. Let $tw(G\colon G')=(m(1),\cdots,m(n))$. Then for each $i=1,\cdots,n$, $m(i)=\frac{1}{2}\{lk_i(G)-lk_i(G')\}$. Thus by Thorem 1

$$\begin{aligned}\sigma_G(f\colon M)&=\sigma_{G'}(f\colon M)-\tau(G\colon G')\\&=\sigma_{G'}(f\colon M)-\sum_{i=1}^{n}m(i)\\&=\sigma_{G'}(f\colon M)-\frac{1}{2}\sum_{i=1}^{n}(lk_i(G)-lk_i(G'))\\&=\sigma_{G'}(f\colon M)-\frac{1}{2}\sum_{i=1}^{n}lk_i(G)+\frac{1}{2}\sum_{i=1}^{n}lk_i(G')\,.\end{aligned}$$

Hence the result follows. □

DEFINITION. We call the number $\sigma_G(f\colon M)+\frac{1}{2}\,lk(G)$ the *signature* of the involution f, and denote it by $\sigma(f\colon M)$.

3. Relation between the signature of an involution and the signature of a link in S^3

In 1962, Trotter showed that for any Seifert matrix V of a knot the signature of $V+V'$ is an invariant of the knot type [Tr]. In 1965, Murasugi introduced an integral matrix M of a link ι and showed that the signature of $M+M'$ is an invariant of the link type of ι [Mr-1]. Later in 1969, Shinohara showed that the two signatures are same [Sh]. In this section, we give a relation between our signature and the signature of a link for the case the orbit space M/f is homeomorphic to S^3.

Throughout this section, we assume that M/f is homeomorphic to S^3. Thus f is admissible. We choose the orientation of M^3 so that the natural projection of M to M/f is an orientation preserving map, where we assume M/f has the usual orientation.

Let $\iota=\mathrm{Fix}(f)$. Then ι is a link in $M/f=S^3$. To calculate the signature of ι, we follow Shinohara's method in [Sh]: Let $p\colon S^3\to S^2$ be a regular projection (for the definition of a regular projection, see [Cr]). We consider $S^2\subset S^3$. Suppose that the link ι possesses an orientation. Let $L=p(\iota)$. We assume that the orientation of L is inherited from that of ι, where L is considered as a linear graph whose vertices are the double crossings of L and whose edges are the closed 1-cells into which the double crossings subdivide L. At each double

crossing c, we modify L as shown in Figure 3.1, and then we get mutually disjoint loops $\bar{S}_1, \cdots, \bar{S}_t$. By [Trs], we can assume that $\bar{S}_1, \cdots, \bar{S}_t$ bound mutually disjoint 2-disks $\bar{R}_1, \cdots, \bar{R}_t$ in S^2. Let $\bar{r}_1, \cdots, \bar{r}_m$ be the closures of connected components of $S^2 - L$ which contain no Int $\bar{R}_i$. They are called the α-regions. At each double crossing c, we join the two α-regions by a twisted band $B(c)$ as shown in Figure 3.2. Then $F = (\bigcup_{i=1}^{t} \bar{R}_i) \cup (\bigcup_c B(c))$ is an orientable surface. Furthermore there is an ambient isotopy of S^3 which sends ∂F to ι in S^3. We regard ∂F as the link ι. The surface F possesses the orientation which induces that of ι. Let $T: F \times [-1, 1] \to S^3$ be an embedding such that (1) $T(x, 0) = x$ for all $x \in F$, and (2) $T(F \times 1)$ is on the positive normal side with respect to F. Note that $Cl(S^3 - T(F \times [-1, 1])$ is a handle body, and hence the preimage of F in M is a CH-surface. Let $\tilde{F}$ be the CH-surface. We can choose oriented loops $\alpha_1, \cdots, \alpha_m$ on F in such a way that (1) the orientation of α_i is as shown in Figure 3.3, (2) the map p maps α_i homeomorphically onto a loop $\bar{\alpha}_i$ in $p(F)$ which runs once around $\bar{r}_i$ and is parallel to the boundary of $\bar{r}_i$ except on $p(\bigcup_c B(c))$, (3) $\bar{\alpha}_i$ and $\bar{\alpha}_j$ $(i \neq j)$ meet only at the double crossings which are incident to $\bar{r}_i$ and $\bar{r}_j$, and (4) at each double crossing c, if $\bar{r}_i$ is on the left side with respect to the direction of the under pass at c, then $\bar{\alpha}_i$ meets the boundary of $\bar{r}_i$ once just before the point c and once more right after the point c (see Fig. 3.3).

Let U be a handle body in M bounded by the CH-surface $\tilde{F}$. Then there are m mutually disjoint loops $x_1, \cdots, x_m$ on $\tilde{F}$ such that (1) $x_i/f = \alpha_i$, (2) $x_i \simeq 0$ in U, and (3) on $\tilde{F}$, the intersection of x_i and Fix(f) consists of only crossing points. The handle body U possesses the orientation inherited from that of M, and $\tilde{F}$ possesses the orientation inherited from that of U in the usual way. The orientation of α_i induces that of x_i. Note that any (m-1) subset of $x_1, \cdots, x_m$ represents a generating set for the group $\kappa = \mathrm{Ker}(i_*: H_1(\tilde{F}) \to H_1(U))$. Let $W = (w_{ij})$ be the matrix whose (i, j)-entry is $x_i \cdot f_*(x_j)$. Then $\sigma_{\tilde{F}}(f: M)$ equal to the signature of the matrix W.

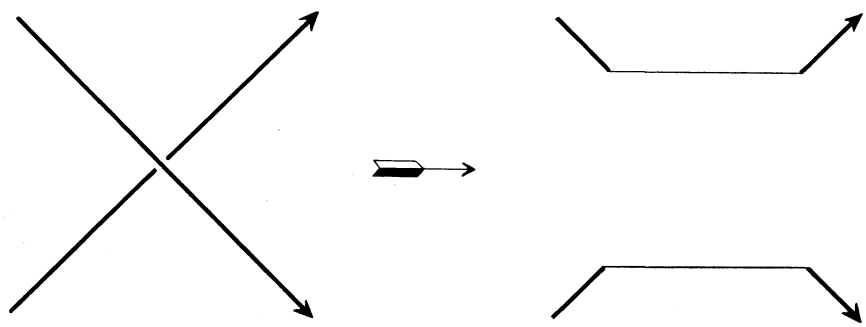

Fig. 3.1

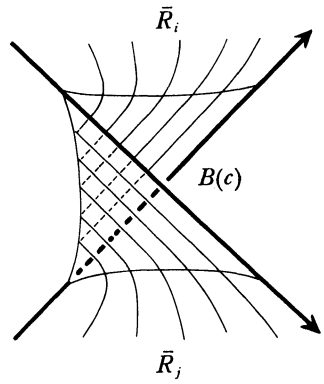

Fig. 3.2

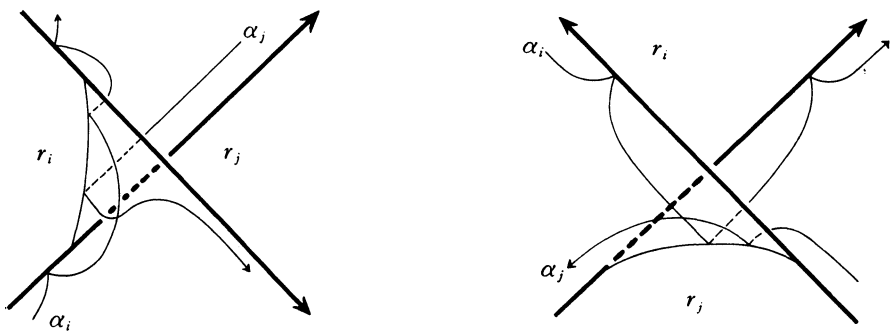

Fig. 3.3

Proposition 3.1. *The signature of the link ι is equal to the signature $\sigma_{\tilde{F}}(f\colon M)$.*

Proof. Let $A=(a_{ij})$ be the matrix with $a_{ij}=lk(T(\alpha_i\times 1)\colon \alpha_j)$. Then the signature of link ι is equal to the signature of $A+A'$ by [Sh]. It is easy to show that $w_{ij}=a_{ij}+a_{ji}$ (see Fig. 3.3). Thus the result follows. □

Now $\sigma(f\colon M)$ and the signature of the link ι are invariants. Hence the difference of those two invariants is also an invariant. The following theorem explains what it is.

Theorem 3. *Let $\iota_i=S(i)/f$ and let the orientation of ι_i be the one inherited from that of ι. Then we have*

$$\sigma(f\colon M)-\sigma_{\tilde{F}}(f\colon M)=\sum_{i<j} lk(\iota_i\colon \iota_j)\,.$$

Proof. It is sufficient to calculate $lk(\tilde{F})$ by the definition of $\sigma(f\colon M)$. For each $i=1,\cdots,n$

$$\begin{aligned} lk_i(\tilde{F}) &= lk(\iota_i\colon \sum_{j\neq i}\iota_j) \\ &= \sum_{i\neq j} lk(\iota_i\colon \iota_j)\,. \end{aligned}$$

Hence
$$lk(\widetilde{F}) = \sum_{i=1}^{n} \sum_{j \neq i} lk(\iota_i : \iota_j)$$
$$= \sum_{i \neq j} lk(\iota_i : \iota_i) = 2 \sum_{i<j} lk(\iota_i : \iota_j) .$$

Therefore the result follows. □

Corollary. $\sigma(f: M) = \sigma(\iota) + \sum_{i<j} lk(\iota_i : \iota_j)$. □

NOTE. For any link ι in a homology 3-sphere Σ^3, let F be a surface (which may not be orientable) whose complement in Σ^3 is an open hadle body. Let M be the double branched covering of Σ^3 with the branching locus ι, induced from F. Let $\iota_1, \cdots, \iota_m$ be the components of ι. Then $\sigma(f: M) - \sum_{i<j} 1k(\iota_i : \iota_j)$ is an invariant, where $f: M \to M$ is the transformation. And this number is an extension of the signature of a link in S^3.

4. Signatures

Fukuhara defines a signature of an orientation preserving involution on a homology 3-sphere M [Fk]. His definition is derived from Hirzebruch's formula about the signature of ramified coverings. Kauffman and Taylor define a signature of a link in the 3-sphere, and they show that the signature is equal to the Murasugi signature [KT]. Their definition coincides with Fukuhara's signature provided that M is the 3-sphere. In the previous section we proved that our signature coincides with Murasugi signature. This fact makes us think that our signature may coincide with Fukuhara's signature. In this section we introduce another signature of a CH-surface in a homology 3-sphere which is based on Craggs's theory on triadic 4-manifolds. By means of this signature we show that our original signature coincides with Fukuhara's signature.

Throughout this section we assume that M is an oriented $\boldsymbol{Z}$-homology 3-sphere and $f: M \to M$ is an orientation preserving involution.

Let U be a handle body in M with $f(U) \cap U = \partial U$. Let U possess the orientation inherited from that of M. Let Q be the boundary of U. Orientate Q such that (the orientation of Q)$\times$(the outward normal direction) coincides with the orientation of M.

For each pair of elements x and y in $H_1(Q)$, $x \cdot y$ denotes the intersection number of x and y with respect to the orientation of Q. Any homeomorphism h of Q onto itself induces an automorphism h_* of $H_1(Q)$. This automorphism preserves intersection numbers $x \cdot y = h_*(x) \cdot h_*(y)$ if h is orientation preserving and reverses their sign $x \cdot y = -h_*(x) \cdot h_*(y)$ if h is orientation reversing (see [Dd], Section VIII, Proposition 13.6). An automorphism of $H_1(Q)$ is called *symplectic* if it preserves intersection numbers, and *negative symplectic* if it reverses their signs. It was proved by Nielsen (see [Mks], Theorem N13) that for any surface Q, symplectic and negative symplectic automorphisms are induced by homeomor-

phisms.

Let G be an abelian group and $g(1),\cdots,g(t)$ elements in G. We denoted by $\langle g(1),\cdots,g(t)\rangle$ the subgroup of G generated by the elements $g(1),\cdots,g(t)$.

Let m be the genus of Q. We say that a basis $\{g(1),\cdots,g(2m)\}$ for $H_1(Q)$ is *symplectic* if the basis satisfies the following condition: For each $i=1,\cdots,2m$; $j=1,\cdots,2r$

$$g(i)\cdot g(j)=\begin{cases}0 & \text{if } |j-i|\neq m\\ (j-i)/m & \text{if } |j-i|=m\,.\end{cases}$$

Hence the $2m\times 2m$ intersection number matrix $(a(i,j))$ with respect to the basis is $\begin{pmatrix}0 & I_m\\ -I_m & 0\end{pmatrix}$ where $a(i,j)=g(i)\cdot g(j)$ and I_m denotes the $m\times m$ identity matrix.

For each symplectic basis $\{g(1),\cdots,g(2m)\}$ let

$$G_L=\langle g(1),\cdots,g(m)\rangle$$
$$G_H=\langle g(m+1),\cdots,g(2m)\rangle\,.$$

Let $V=M-\mathrm{Int}\,U$. Suppose that $V=f(U)$. The following proposition is proved as Corollary (32.9) of [Pk].

Proposition 4.1. *Let $i_U\colon Q\to U$ and $i_V\colon Q\to V$ be the inclusion maps. Then there is a symplectic basis for $H_1(Q)$ such that $G_L=Ker(i_U)_*$ and $G_H=Ker(i_V)_*$.* □

Let $\{g(1),\cdots,g(2m)\}$ be a symplectic basis which satisfies the result of Proposition 4.1. Let A be a matrix representation of the automorphism f_* of $H_1(Q)$ with respect to the symplectic basis, where we regard $H_1(Q)$ as being made up of column vectors representing linear combinations of the basis vectors and the action of A as left matrix multiplication on column vectors.

Proposition 4.2. *The matrix A is of the form $\begin{pmatrix}0 & J^{-1}\\ J & 0\end{pmatrix}$ where J is an $m\times m$ symmetric unimodular matrix.*

Proof. Since $f(U)=V$, for each $i=1,\cdots,m$, the element $f_*(g(i))$ lies in the subgroup $\langle g(m+1),\cdots,g(2m)\rangle$. Hence

$$A\circ\begin{pmatrix}0 & I_m\\ I_m & 0\end{pmatrix}=\begin{pmatrix}B & 0\\ 0 & C\end{pmatrix},\ \text{where } B \text{ and } C \text{ are } m\times m \text{ matrices.}$$

Let $A=\begin{pmatrix}H & L\\ J & K\end{pmatrix}$, where H, J, K, and L are $m\times m$ matrices. Then

$$\begin{pmatrix}B & 0\\ 0 & C\end{pmatrix}=\begin{pmatrix}H & L\\ J & K\end{pmatrix}\circ\begin{pmatrix}0 & I_m\\ I_m & 0\end{pmatrix}=\begin{pmatrix}L & K\\ K & J\end{pmatrix}.$$

Thus $K=H=0$ and hence

$$A=\begin{pmatrix}0 & L\\ J & 0\end{pmatrix}.$$

Since f is an involution, $A\circ A=\begin{pmatrix}I_m & 0\\ 0 & I_m\end{pmatrix}$. Hence

$$\begin{pmatrix}I_m & 0\\ 0 & I_m\end{pmatrix}=\begin{pmatrix}0 & L\\ J & 0\end{pmatrix}\begin{pmatrix}0 & L\\ J & 0\end{pmatrix}=\begin{pmatrix}LJ & 0\\ 0 & JL\end{pmatrix}.$$

Thus $LJ=IJL=I_m$ and $L=J^{-1}$. Hence A is of the form $\begin{pmatrix}0 & J^{-1}\\ J & 0\end{pmatrix}$. It remains to show that J is symmetic. Since f is orientation reversing on Q, we have $f_*(g(i))\circ f_*(g(j))=-g(i)\circ g(j)$. Hence

$$A^t\begin{pmatrix}0 & I_m\\ -I_m & 0\end{pmatrix}A=\begin{pmatrix}0 & -I_m\\ I_m & 0\end{pmatrix}, \text{ and}$$

$$\begin{aligned}\begin{pmatrix}0 & -I_m\\ I_m & 0\end{pmatrix}&=\begin{pmatrix}0 & J^t\\ (J^{-1})^t & 0\end{pmatrix}\begin{pmatrix}0 & I_m\\ -I_m & 0\end{pmatrix}\begin{pmatrix}0 & J^{-1}\\ J & 0\end{pmatrix}\\ &=\begin{pmatrix}0 & -J^t\circ J^{-1}\\ (J^{-1})^t\circ J & 0\end{pmatrix}.\end{aligned}$$

Therefore $J^t\circ J^{-1}=I_m$ and $J=J^t$, i.e. J is symmetric. This completes the proof of Proposition 4.2. □

Proposition 4.3. *Let* $\{g(1),\cdots,g(2m)\}$ *be a symplectic basis for* $H_1(Q)$. *Let* $\mathcal{G}=\{x\in H_1(Q): f_*(x)=-x\}$. *Then* $\mathcal{G}$ *is generated by the set* $\{g(1)-f_*(g(1)),\cdots,g(m)-f_*(g(m))\}$.

Proof. It is clear that each $g(i)-f_*(g(i))$ belongs to $\mathcal{G}$. Now $\{g(1)-f_*(g(1)),\cdots,g(m)-f_*(g(m)),g(m+1),\cdots,g(2m)\}$ generates $H_1(Q)$. Let x be an element in $\mathcal{G}$. Then

$$x=\sum_{i=1}^{m}\alpha(i)(g(i)-f_*(g(i)))+\sum_{i=1}^{m}\beta(i)g(m+i)$$

where $\alpha(i)$ and $\beta(i)$ are integers.
Since $f_*(x)=-x$ and $f_*(g(i)-f_*(g(i))=-(g(i)-f_*(g(i)))$, we have

$$\sum_{i=1}^{m}\beta(i)f_*(g(m+i))=-\sum_{i=1}^{m}\beta(i)g(m+i).$$

But $f_*(g(m+i))$ lies in the subgroup generated by the elements $g(1),\cdots,g(m)$. Hence $\beta(i)=0$ for each $i=1,\cdots,m$, and x lies in the subgroup $\langle g(1)-f_*(g(1)),\cdots,g(m)-f_*(g(m))\rangle$. This completes the proof of Proposition 4.3. □

Note that $\mathcal{G}$ is uniquely determined by f and is independent of the choice of symplectic basis. We define as follows a bilinear form $\tilde{B}$: $\mathcal{G}\times\mathcal{G}\to\boldsymbol{Z}$. Let $\tilde{h}$: $Q\times I\to U$ be an embedding such that for each $x\in Q$ we have $\tilde{h}(x, 0)=x$. Then for each $x, y\in\mathcal{G}$ we define $\tilde{B}(x, y)=lk(x, \tilde{h}_*(y))$, where $lk(a, b)$ denotes the linking number of a and b, and $\tilde{h}_*$: $H_1(Q)\to H_1(\tilde{h}(Q\times 1))$ is the isomorphism induced by $\tilde{h}$.

We have the following formulae: For each $i=1,\cdots,m$; $j=1,\cdots,m$,

$$lk(g(i),\tilde{h}_*(g(m+j))) = \begin{cases} 0 & \text{if } i\neq j \\ 1 & \text{if } i=j \end{cases} \text{ and}$$

$$lk(\tilde{h}_*(g(i)),g(m+j)) = 0\,.$$

Proposition 4.4. *Let* $\{g(1),\cdots,g(2m)\}$ *be a symplectic basis for* $H_1(Q)$. *Let* $\begin{pmatrix} 0 & W^{-1} \\ W & 0 \end{pmatrix}$ *be the matrix presentation for* f_* *with respect to the symplectic basis. Then for each* $i=1,\cdots,m$; $j=1,\cdots,m$,

$$\tilde{B}(g(i)-f_*(g(i)), g(j)-f_*(g(j))) = -w_{ij}$$

where w_{ij} *is the* $(i, j)^{\text{th}}$ *entry of* W.

Proof.

$$\begin{aligned}
&\tilde{B}(g(i)-f_*(g(i)), g(j)-f_*(g(j))) \\
&= lk(g(i)-\textstyle\sum w_{ih}g(m+h),\ h_*(g(j))-\sum w_{jk}\tilde{h}_*(g(m+k))) \\
&= lk(g(i),\ \tilde{h}_*(g(j)))-\textstyle\sum w_{ih}lk(g(m+h),\ \tilde{h}_*(g(j))) \\
&\quad -\textstyle\sum w_{jk}lk(g(i),\ \tilde{h}_*(g(m+k)))+\sum w_{ih}w_{jk}lk(g(m+h),\ \tilde{h}_*(g(m+k))) \\
&= -w_{ji}lk(g(i),\ \tilde{h}_*(g(m+i)) \\
&= -w_{ji} = -w_{ij}\,.
\end{aligned}$$

This completes the proof of Proposition 4.4. □

Proposition 4.5. *Let* $\{g(1),\cdots,g(2m)\}$ *be a symplectic basis for* $H_1(Q)$. *Let* $\begin{pmatrix} 0 & W^{-1} \\ W & 0 \end{pmatrix}$ *be the matrix presentation for* f *with respect to the symplectic basis. Then* W *is the matrix presentation for* B *with respect to an appropriate basis.*

Proof. For each $i=1,\cdots,m$; $j=1,\cdots,m$,

$$\begin{aligned}
B(g(i), g(j)) &= g(i)\cdot f_*(g(j)) \\
&= g(i)\cdot w_{jk}g(m+k) \\
&= w_{ji} = w_{ij}\,. \quad \square
\end{aligned}$$

Now we assume that the CH-surface Q has the following property: the set

$Q-\mathrm{Fix}(f)$ consists of two components. Then the surface Q is of even genus. Let 2n be the genus of Q. Let T be the solid torus of genus 2n. We define as follows a homeomorphism h of Q to ∂T. The orbit space Q/f is the orientable surface of genus n with the boundary $\mathrm{Fix}(f)/f$. Let $\tilde{L}_1, \cdots, \tilde{L}_n$ be mutually disjoint proper simple arcs in Q/f such that $\mathrm{Int}(Q/f)-\cup\tilde{L}_i$ is an open 2-cell. For each $i=1, \cdots, n$, let L_i be the loop on Q which covers $\tilde{L}_i$. Note that $\langle[L_1], \cdots, [L_n]\rangle=\mathcal{G}$ where $[L_i]$ is the homology class in $H_1(Q)$ represented by the loop L_i. Hence there is a homeomorphism $h: Q\to\partial T$ such that $h(L_i)$ bounds a disk D_i in T. Then $\{D_1, \cdots, D_n\}$ is a complete system of meridinal disks. This implies that there exists an involution h^* of T such that

(i) $h^*(D_i)=D_i$,

(ii) $h^*|\partial T=h\circ(f|Q)\circ h^{-1}$.

Furthermore we may assume that

(**) T/h^* collapses to $\partial T/h^*$.

We construct a triadic 4-manifold N as follows. The Heegaard splitting $(M; U, V)$ induces a homeomorphism $h_2: \partial U\to\partial U$ such that the identification space $U\bigcup_{h_2}(-U)$ is homeomorphic with M fixing U. Let $h_3: \partial U\to\partial U$ be a homeomorphism such that the identification space $U\bigcup_{h_3}(-U)$ is homeomorphic with $U\bigcup_h T$ fixing U. Let N be the 4-manifold associated with the map pair (h_2, h_3) (for the definition see [BC]). The triadic 4-manifold N may be constructed as follows. Let $k_1: \partial U\times[-1, 0]\to\partial V\times[0, 1]$, $k_2: \partial V\times[-1, 0]\to\partial T\times[0, 1]$, $k_3: \partial T\times[-1, 0]\to\partial U\times[0, 1]$ be the maps defined by $k_1(x, t)=(x, -t)$, $k_2(y, t)=(h^{-1}(y), -t)$, $k_3(z, t)=(h(z), -t)$, for all $x\in\partial U$, $y\in\partial$, $z\in\partial T$, and $t\in[-1, 0]$. Then N is the identification space of $(U\cup V\cup T)\times[-1, 1]$ with respect to the maps k_1, k_2, k_3.

The boundary of the 4-manifold N consists of the three connected components which are homeomorphic with M, the identification space $T\bigcup_h U$, and the identification space $T\bigcup_h V$.

Proposition 4.6. *The identification spaces $T\bigcup_h U$ and $T\bigcup_h V$ are homology 3-spheres.*

Proof. Since $\langle[L_1], \cdots, [L_n]\rangle=\mathcal{G}$, the result follows from Proposition 4.3. □

Let $\tilde{f}: N\to N$ be the involution defined by $\tilde{f}(x, t)=(f(x), -t)$, $\tilde{f}(z, t)=(h^*(z), -t)$ for all $x\in M$, $z\in T$, and $t\in[-1, 1]$.

Proposition 4.7. *The 2nd homology group $H_2(N/f)$ is trivial.*

Proof. Let $N_1=T\times[0, 1]\bigcup_{k_2}V\times[-1, 1]$. Then $N/\tilde{f}=N_1/\tilde{f}$. Hence $N/\tilde{f}$

collapses to $(T\times 0\bigcup_{k_2}V\times 0)/\tilde{f}$. By the property (**), the set $(T\times 0\bigcup_{k_2}V\times 0)/\tilde{f}$ collapses to $V\times 0/\tilde{f}$ which is homeomorphic with M/f. Since M/f is a homology 3-sphere, we have the result. □

For each orientable 4-manifold W, we mean by B_W the bilinear form of $H_2(W)\otimes H_2(W)$ to $\boldsymbol{Z}$ defined by $B_W(x\otimes y)=x\cdot y$, where $\cdot$ means the intersection number. We denote the signature of B_W by sign (W).

Proposition 4.8. *For the above N, sign$(N)=\sigma(f\colon M)$.*

Proof. There exist natural inclusion maps of $U\times[-1, 1]$, $V\times[-1, 1]$, and $T\times[-1, 1]$ into N. For each $t\in[-1, 1]$, we denote by U_t, V_t, T_t the image of $U\times t$, $V\times t$, $T\times t$ under the natural inclusion maps respectively. Then N collapses to $U_0\cup V_0\cup T_0$. The union $U_0\cup V_0$ is homeomorphic with $U\cup V$, a homology 3-sphere. Hence the composition map $\phi\colon H_2(N)\to H_2(U_0\cup V_0\cup T_0)\to H_2(U_0\cup V_0\cup T_0,\ U_0\cup V_0)\to H_2(T_0, \partial T_0)$ is an isomorphism, where the first map is the map induced from the collapsing, the second map is the natural map, and the third map is the excision map. Let $\psi\colon (T_0,\partial T_0)\to(T,\partial T)$ be a homeomorphism. Let $D_1,\cdots,D_n$ be the proper disks in T with $\partial D_i=L_i$ defined in the construction of N. Then $\{[D_1],\cdots,[D_n]\}$ is a generating system of $H_2(T, \partial T)$. Hence $\{\psi^{-1}(D_1),\cdots,\psi^{-1}(D_n)\}$ is a generating set of $H_2(T_0, \partial T_0)$. It is clear that $B_N(\phi^{-1}([\psi^{-1}(D_i)])\times\phi^{-1}([\psi^{-1}(D_j)]))=-L_i\cdot L_j$ where $\cdot$ means the intersection number on Q. Hence the result follows from Proposition 4.4. □

We construct as follows a 4-manifold N^* and an involution f^* on N^* such that $\partial N^*=M$ and $f^*|\partial N^*=f$. Let $M_0=U_{-1}\cup V_1$, $M_1=U_1\cup T_{-1}$, $M_1'=T_1\cup V_{-1}$. Then M_0 is homeomorphic with M, and M_1 is homeomorphic with M_1'. Let A be a 3-ball in Int T, and A' be the image of $(\mathrm{Int}\,A)\times[-1, 1]$ under the natural inclusion map of $T\times[-1, 1]$ into N. Let $N'=N-A'$. Then $\partial N'$ consists of two connected components: one is homeomorphic with M and the other is homeomorphic with the connected sum $M_1\# M_1'$. Let A'' be a 3-ball in M_1. Let $N''=(M_1-\mathrm{Int}\,A'')\times[-1, 1]$. Since $\partial N''$ is homeomorphic with $M_1\# M_1$, there is a homeomorphism $k\colon(\partial N'-M_0)\to\partial N''$. Let N^* be the identification space $N'\bigcup_k N''$. It is clear that N^* possesses an involution f^* which is an extension of $\tilde{f}|N$. From Proposition 4.7 we may assume that

$$(\overset{*}{*}\overset{*}{*})\ H_2(N^*/f^*)=0\,.$$

Theorem 4. *For the above N^*, sign$(N^*)=\sigma(f\colon M)$.*

Proof. Note that $i_*\colon H_2(N')\to H_2(N)$ is an isomorphism, where i_* is the homomorphism induced from the inclusion map. Since $\partial N'$ is a homology 3-sphere and $H_2(N'')=0$, the Mayer-Vietoris exact sequence for the pair $(N',$

N'') implies that $j_*: H_2(N') \to H_2(N^*)$ is an isomorphism, where j_* is the homomorphism induced from the inclusion map. Considering the map $j_* \circ i_*^{-1}$, we get the result from Proposition 4.8. □

According to [Fk], Fukuhara's signature is equal to $\frac{1}{8}\{\mathrm{sign}(N^*)-\mathrm{sign}(N^*/f^*)\}$, which is $\frac{1}{8}\mathrm{sign}(N^*)$ by the Property ($\overset{*}{*}$). Hence we have the following corollary.

Corollary. *The Fukuhara's signature for f is equal to* $\frac{1}{8}\sigma(f: M)$. □

References

[BC] J.S. Birman, R. Craggs: *The μ-invariant of 3-manifolds and certain structural properties of the group of homeomorphisms of a closed, oriented 2-manifold,* Trans. Amer. Math. Soc. **237** (1978), 283–309.

[BL] W. Browder, G.R. Livesay: *Fixed point free involutions on homotopy spheres,* Bull. Amer. Math. Soc. **73** (1967), 242–245.

[Crg-1] R. Craggs: *Relating Heegaard and surgery presentations for 3-manifolds,* Notices Amer. Math. Soc. **20** (1973), A-617.

[Crg-2] ———: *4-manifolds and their Heegaard diagrams,* Notices Amer. Math. Soc. **23** (1976), A-311.

[Cr] R.H. Crowell: *Non-alternating links,* Illinois J. Math. **3** (1959), 101–120.

[Dd] A. Dold: Lectures on algebraic topology, Springer-Verlag, Berlin, Heidelberg, New York, 1972.

[Fk] S. Fukuhara: *On the invariant for a certain type of involutions on homology 3-spheres and its application,* J. Math. Soc. Japan **30** (1978) 653–665.

[KT] L.H. Kaufman, L.R. Taylor: *Signature of links,* Trans. Amer. Math. Soc. **216** (1976), 351–365.

[Md] S. Lopez de Medrano: *Involutions,* Ph. D. thesis, Princeton University, 1968.

[Mks] W. Magnus, A. Karass, D. Solitar: Combinatorial group theory, Pure and applied mathematics, vol. VIII, Interscience, New York, 1966.

[Mr-1] K. Murasugi: *On a certain numerical invariant of link types,* Trans. Amer. Math. Soc. **117** (1965), 387–422.

[Mr-2] ———: *On the signature of links,* Topology **9** (1970), 283–298.

[Ng] T. Nagase: *A generalization of Reidemeister-Singer theorem on Heegaard splittings,* Yokohama Math. J. **27** (1979), 23–47.

[Pk] C.K. Papakyriakopoulos: *A reduction of the Poincaré conjecture to group theoretic conjecture,* Ann. of Math. **77** (1963), 205–305.

[Sh] Y. Shinohara: *On the signature of knots and links,* Ph. D. thesis, The Florida State University, 1969.

[Tr] H.F. Trotter: *Homology of group system with application to knot theory,* Ann. of Math. **76** (1962), 464–498.

[Trs] G. Torres: *On the Alexander polynomial,* Ann. of Math. **57** (1953), 57–89.

[Zm] E.C. Zeeman: Seminor on combinatrial topology, Publ. Inst. des Hautes Etudes Sci. Paris, 1963 (mimeographed notes).

Robert Craggs
Department of Mathematics
University of Illinois
Urbana, Illinois 61801
U.S.A.

Teruo Nagase
Department of Information Science
Tokyo Institute of Technology
Oh-okayama, Meguro-ku, Tokyo 152
Japan