The University of Osaka
Institutional Knowledge Archive

Title	On the uniqueness of the decomposition of a link
Author(s)	Hashizume, Yoko
Citation	Osaka Mathematical Journal. 1958, 10(2), p. 283-300
Version Type	VoR
URL	https://doi.org/10.18910/3795
rights	
Note	

The University of Osaka Institutional Knowledge Archive : OUKA

https://ir.library.osaka-u.ac.jp/

The University of Osaka

Hashizume, Yoko
Osaka Math. J.
10 (1958), 283-300.

On the Uniqueness of the Decomposition of a Link

By Yoko HASHIZUME

§ 0. Introduction.

A link of multiplicity n is a collection of n disjoint simple closed oriented polygons in the 3-sphere S^3. Especially a link of multiplicity 1 is a so-called knot. H. Schubert [1] showed that the genus of the product of two knots is equal to the sum of their genera and that every knot is decomposable in a unique way into prime knots. The purpose of this paper is to extend his results to the case of links.

In § 1, using some of the results and methods due to H. Schubert [1], we define the product of links and prove some preliminary theorems.

In § 2, we define decomposition systems for non trivial and non separable links, and prove by the aid of the decomposition system the following

MAIN THEOREM. *Every non trivial and non separable link can be decomposed uniquely into prime links.*

For the links of multiplicity 1, this theorem coincides with H. Schubert's result. But our proof is simpler than his.

The author gratefully acknowledges the guidance of Professor H. Terasaka and S. Kinoshita in preparing this paper.

§ **1.** A *link of multiplicity* n is a collection of n disjoint simple closed oriented polygons in the 3-sphere S^3 [1]. Two links l and l' are said to be *equivalent* and denoted by $l \approx l'$, if there exists an orientation preserving semilinear mapping S^3 onto itself which maps one of them onto the other. Especially, a link of multiplicity 1 is a so-called knot. Throughout this paper we shall denote by l a link, and by k a knot.

We shall say that l *has* μ *components*, if there are μ disjoint cubes $Q_1, \cdots, Q_\mu$ [2] for l such that $l \cap \dot{Q}_i = \emptyset$, $l \cap Q_i \neq \emptyset$ $(i=1, \cdots, \mu)$ and there are no $\mu+1$ disjoint cubes with these properties. A link with multiplicity

1) In the following S^3 will be taken as the boundary of a 4-simplex in 4-dimensional Euclidean space R^4. To simplify our observation, we chose "infinity" of S^3 as a vertex of this 4-simplex, and call the opposite 3-simplex the base simplex and denote it by Δ^3.

2) Such expressions as cubes, spheres, surfaces, disks, arcs, etc. should be understood all simplicial and mappings should be understood all semilinear S^3 onto itself.

1 is said to be *non separable*. A link l is said to be *trivial*, if each component of l consists of a single triangle.

Let Q be a solid cube and let $l=(k_1, \cdots, k_n)$ be a link which has an arc v of k_i in common with the boundary $\dot{Q}$ of Q, the remaining $l-v$ lying wholly within Q except for v. Setting $\overline{l-v}=l^*$, we shall say that (l^*, Q) is a *representation of* l (*with respect to* k_i), or l^* *represents* l *in* Q (*with respect to* k_i). We shall call v a *joining arc of* l^* *on* $\dot{Q}$. If we replace v by an arbitrary joining arc v' of l^* on $\dot{Q}$ such that $l^* \cup v'$ makes a link l', then we have $l' \approx l$ by an analogous argument to Satz 1 of [1].

A cube Q will be said to be an *admissible cube* of l, if $l \cap \dot{Q}$ consists of just two points. We shall denote by Q^c the complemental cube of Q, i.e. $\overline{S^3-Q}$.

Let Q be an admissible cube of l. If $l \cap Q$ represents $l_1=(k_1^1, \cdots, k_n^1)$ in Q with respect to k_i^1 and $l \cap Q^c$ represents $l_2=(k_1^2, \cdots, k_m^2)$ in Q^c with respect to k_j^2, then l is said to be a *product of* l_1 *and* l_2 *associated with* (k_i^1, k_j^2), and denoted by $l=l_1 \underset{ij}{\cdot} l_2$. If we take no notice of the locality of the product, then we say merely that l is a *product of* l_1 *and* l_2 and denote l by $l_1 \cdot l_2$. We say also that Q *cut out* l_1 *from* l and l_2 is the *rest link of* l *with respect to* Q. Then we have

Lemma 1. *For every two links* $l=(k_1^1, \cdots, k_n^1)$ *and* $l_2=(k_1^2, \cdots, k_m^2)$, *there exists* $l_1 \underset{ij}{\cdot} l_2$ *uniquely, where* i *and* j *are a given pair of integers with* $1 \leqq i \leqq n$ *and* $1 \leqq j \leqq m$.

The proof is essentially the same as Satz 3 of [1] and is omitted.

We shall denote by $m(l)$ the multiplicity of l. Then it follows directly from the definition of the products:

Theorem 1. *If* $l=l_1 \cdot l_2$, *then* $m(l)=m(l_1)+m(l_2)-1$.

l is said to be *prime*, if l is non separable and if, whenever $l=l_1 \cdot l_2$, one of l_1, l_2 is trivial.

EXAMPLES.

(1) l_1 (Fig. 1) is a prime link.

(2) l_2 (Fig. 2) is a non prime link which is the product of two l_1.

In the same way as the case for knots [2], we can span for an arbitrary given link l a connected orientable singularity free surface F. If we denote by $g(F)$ the genus of F, the minimal number of $g(F)$ for all choices of such F will be called the *genus of* l and will be denoted by $g(l)$. Then we have the following

Theorem 2. *If* $l=l_1 \cdot l_2$, *then* $g(l)=g(l_1)+g(l_2)$.

REMARK. A product $l = l_1 \underset{ij}{\cdot} l_2$ depends in general on the pair (i, j), but its genus is uniquely determined only by l_1 and l_2.

Since Theorem 2 is proved by an analogous way to the proof of Satz 4 of [1], using a lemma which is a generalization of Hilfssatz 7 of [1] for the case of links, the proof is omitted.

For the case of knots, we know that $g(k) = 0$, if and only if k is trivial and that if $g(k) = 1$ then k is prime (cf. Satz 6 of [1]). But by

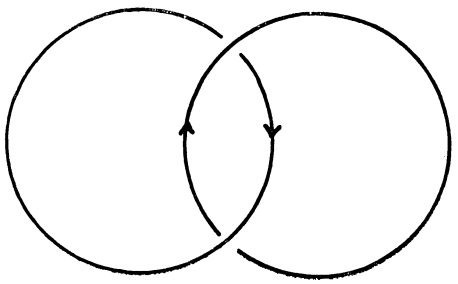

l_1

Fig. 1.

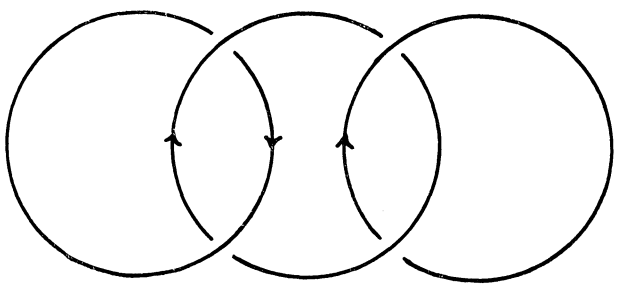

l_2

Fig. 2.

our definition of links, the circumstances are very different from the case of knots. For example, l_1 (Fig. 1) is a link of genus 0 but non trivial, and l_2 (Fig. 2) is a link of genus 0 but neither trivial nor prime. We can only verify the following:

Theorem 3. *If $g(l) = 0$ and $m(l) = 2$, and if l is non separable, then l is prime.*

Proof. Let $l = l_1 \cdot l_2$. Then by Theorem 2 $g(l_1) = g(l_2) = 0$. On the

other hand, since $m(l)=2$, either $m(l_1)=1$ or $m(l_2)=1$. We may assume without loss of generality that $m(l_1)=1$. Then from $g(l_1)=0$ it follows that l_1 is trivial. Hence l is prime.

We have further

Theorem 4[3]. *Let $l=l_1\cdot l_2$. If one of l_1, l_2 is a trivial knot, then the other is equivalent to l. Conversely if one of l_1, l_2 is equivalent to l, then the other is a trivial knot.*

Proof. The first part is clear (cf. Satz 5 of [1]). To prove the second part, let $l\approx l_1$. Then clearly $m(l)=m(l_1)$. But since $m(l)=m(l_1\cdot l_2)$ $=m(l_2)+m(l_2)-1$, we have $m(l_2)=1$, what is the same, l_2 is a knot. From Theorem 2, it follows that $g(l_2)=0$, i.e. l_2 is a trivial knot.

§ **2.** In this section we shall consider only about non separable links.

We shall use the following notations. Let Q be the admissible cube of l, that is, a cube intersecting l in just two points, and let $Q_1, \cdots, Q_n$ be admissible cubes of l in $\mathrm{Int}\,Q$ such that $\dot{Q}_i\cap\dot{Q}_j=\emptyset$ $(i, j=1, \cdots, n)$. Then take out all the maximal cubes[4] $\{Q_{n1}, \cdots, Q_{nm}\}$ from $\{Q_1, \cdots, Q_n\}$. Let v, $v_{n1}\cdots, v_{nm}$ be joining arcs of l on $\dot{Q}$, $\dot{Q}_{n1}, \cdots, \dot{Q}_{nm}$ respectively. Then $l\cap(S^3-(Q^c\cup Q_{n1}\cup\cdots\cup Q_{nm}))$ together with v, $v_{n1}, \cdots, v_{nm}$ make a link as shown in Fig. 3. We denote it by $l-(Q^c+Q_1+\cdots+Q_n)$.

Lemma 2. *Let $l=l_1\underset{ij}{\cdot}l_2$ and let (l^*, Q) be a representation of l. Then there exists an admissible cube Q_1 of l inside Q such that $l_1^*=l^*\cap Q_1$ represents l_1 in Q_1 with respect to k_i and $l-(Q^c+Q_1)$ is equivalent to l_2* (Fig. 4).

Since Lemma 2 is easily proved almost in the same way as the proof of Hilfssatz 8 of [1], we omit the proof.

$\mathfrak{D}=\{(l_1, Q_1), \cdots, (l_n, Q_n)\}$ will be called a *decomposition system of l*, if it satisfies the following conditions:

(D I) Each Q_i is an admissible cube of l.

(D II) For each pair of different Q_i and Q_j, $Q_i\cap Q_j=\emptyset$ or $Q_i\subset\mathrm{Int}\,Q_j$ or $Q_j\subset\mathrm{Int}\,Q_i$, or $Q_i=Q_j^c$.

(D III) $S^3=Q_1\cup\cdots\cup Q_n$.

(D IV) Let $Q_j, \cdots, Q_l$ be all the cubes contained in $\mathrm{Int}\,Q_i$. Then $l_i\approx l-(Q^c+Q_j+\cdots+Q_l)$ and each l_i is prime.

(D V) l is a product of $l_1, \cdots, l_n$.

---

3) Theorem 4 is the extension of Satz 5 of [1] to links.

4) We say that Q_i is maximal in $\{Q_1, \ldots Q_n\}$, if there is no Q_j in $\{Q_1, \ldots, Q_n\}$ such that $Q_i\subset\mathrm{Int}\,Q_j$.

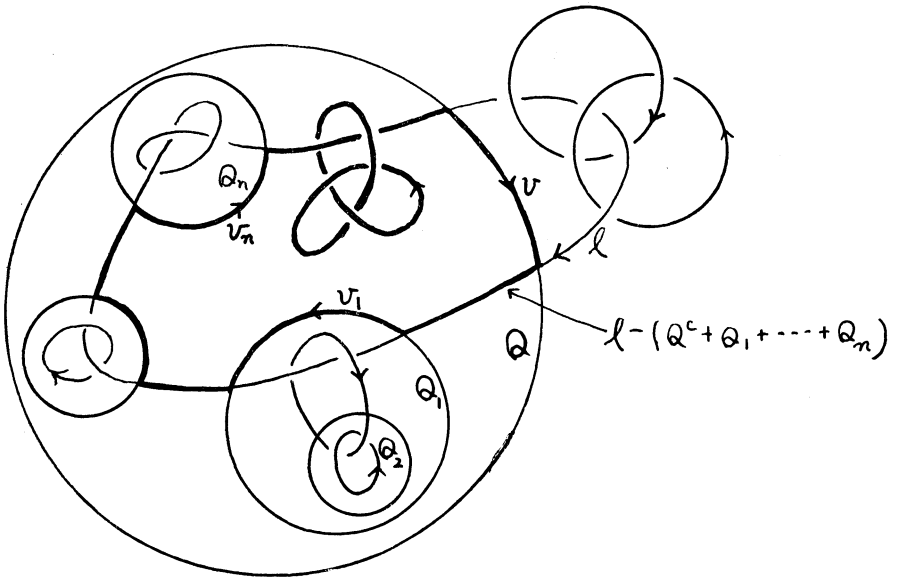

Fig. 3.

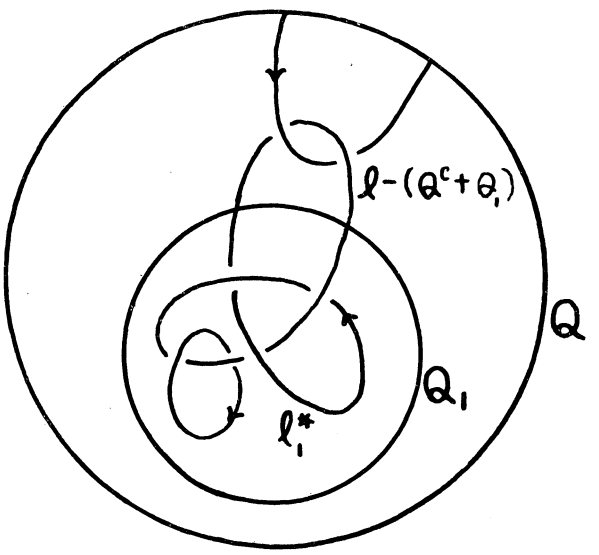

Fig. 4.

Now we shall show that

Theorem 5. *For every non trivial and non prime link, there exists at least one decomposition system.*

Proof. Since l is neither trivial nor prime, there exists an admissible cube Q_1 such that $l=l_1\cdot l_2$, where $l_1^*=l\cap Q_1$, $l_2^*=l\cap Q_1^c$.

From Theorem 1 and Theorem 2 we have

$$(m(l_1)+g(l_1))+(m(l_2)+g(l_2))=m(l)+g(l)+1$$

Here $m(l_i)\geqq 1$ $(i=1, 2)$. But if e.g. $m(l_1)=1$ and $g(l_1)=0$, then l_1 must be trivial, contradicting the way of decomposition, therefore $m(l_1)+g(l_1)\geqq 2$. Thus we have

$$m(l_i)+g(l_i)<m(l)+g(l) \quad i=1, 2 \quad (1).$$

Here we put $Q_2=Q^c$. If l_i $(i=1, 2)$ is not prime, then there exists by Lemma 2 an admissible cube Q_{i1} in $\operatorname{Int} Q_i$ such that $l_i=l_{i1}\cdot l_{i2}$, where $l_{i1}^*=l_1\cap Q_{i1}$, $l_{i2}=l_i-(Q_i^c+Q_{i1})$. Next suppose l_{i2} $(i=1, 2)$ is not prime.

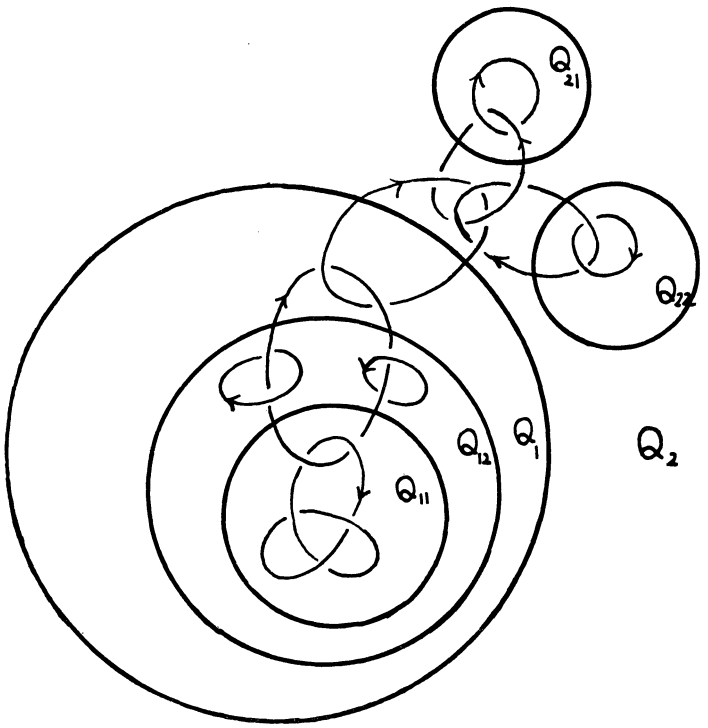

Fig. 5.

Then we decompose l_{i2} into two links with the aid of an admissible cube Q_{i2} of l lying wholly within Q_i and such that $\dot{Q}_{i1}\cap\dot{Q}_{i2}=\emptyset$ as shown in Fig. 5.

We proceed with these decomposition procedures. Then these procedures cannot continue indefinitely as will be seen easily from (1), and each factor link comes finally to be prime.

Renumbering the cubes and links above obtained, we obtain a system $\mathfrak{D}=\{(l_1, Q_1), \cdots, (l_n, Q_n)\}$. From the way of the construction of $\mathfrak{D}$ it is clear that $\mathfrak{D}$ satisfies the conditions (D I)-(D V). Thus Theorem 5 is proved.

Let $\mathfrak{D}=\{(l_1, Q_1), \cdots, (l_n, Q_n)\}$ and $\mathfrak{D}'=\{(l_1', Q_1'), \cdots, (l_m', Q_m')\}$ be decomposition systems of a link. An element (l_i, Q_i) of $\mathfrak{D}$ and an element (l_j', Q_j') of $\mathfrak{D}'$ will be called *equivalent* and denoted by $(l_i, Q_i) \approx (l_j', Q_j')$, if $l_i \approx l_j'$. $\mathfrak{D}$ and $\mathfrak{D}'$ will be called *equivalent* and denoted by $\mathfrak{D} \approx \mathfrak{D}'$, if $n=m$ and if there is a one-to-one correspondence between the elements of $\mathfrak{D}$ and the elements of $\mathfrak{D}'$ such that the corresponding elements are equivalent. (l_i, Q_i) will be called *an end of* $\mathfrak{D}$, if there is no Q_j in $\mathfrak{D}$ such that $Q_j \subset \mathrm{Int}\ Q_i$.

Lemma 3. *For arbitrary given two decomposition systems* $\mathfrak{D}=\{(l_1, Q_1), \cdots, (l_n, Q_n)\}$ *and* $\mathfrak{D}'=\{(l_1', Q_1'), \cdots, (l_m', Q_m')\}$ *of the same* l *and an end of* $\mathfrak{D}'$, *say* (l_1', Q_1'), *there exists a decomposition system* $\mathfrak{D}''=\{(l_1'', Q_1''), \cdots, (l_n'', Q_n'')\}$ *of* l *satisfying the following conditions*:

(1) $\mathfrak{D}'' \approx \mathfrak{D}$.

(2) (l_1'', Q_1'') *is an end of* $\mathfrak{D}''$ *such that* $l_1'' \approx l_1'$ *and either* $l_1'^* \subseteqq l_1''^*$ *or* $l_1''^* \subseteqq l_1'^*$.

Proof. First we deform l, $\mathfrak{D}$ and $\mathfrak{D}'$ by an isotopic simplicial deformation into the following forms without changing the other circumstances[5]:

(1) Q_1' is a 3-simplex in the interior of the base simplex Δ^3.

(2) Let $l \cap Q_1' = \{A, B\}$. Then A and B are respectively in the interior of certain 2-simplexes which are boundary simplexes of Q_1'.

(3) l, $\{\dot{Q}_1, \cdots, \dot{Q}_n\}$, $\{\dot{Q}_1', \cdots, \dot{Q}_m'\} \subset \mathrm{Int}\ \Delta^3$.

(4) Neither A nor B is a vertex of l.

Thereafter we give a simplicial decomposition $\mathfrak{Z}$ on $l \cup (\bigcup_i \dot{Q}_i)$ such that $\mathfrak{Z}$ is so fine that if σ is a simplex of $\mathfrak{Z}$ such that $\sigma \cap Q_1' \neq \emptyset$, then there is no simplex σ' of $\mathfrak{Z}$ such that $\sigma' \cap \{(\bigcup_i \dot{Q}_i') - \dot{Q}_1'\} \neq \emptyset$ and $\sigma' \cap \sigma \neq \emptyset$. From the above condition and (1)-(4), we can further deform Q_1' and $\mathfrak{D}$ such that it satisfies the following conditions, without moving l and without changing the other circumstances.

5) See pp. 89-pp. 90 [1].

(5) $A, B \notin \dot{Q}_i$ $(i=1, \cdots, n)$.

(6) Neither A nor B is a vertex of $\mathfrak{Z}$.

(7) Every vertex of Q_1' is not on $\dot{Q}_i$ $(i=1, \cdots, n)$.

(8) The intersection of any edge of Q_1' and any edge of $\mathfrak{Z}$ is null.

From the above conditions it follows that $\dot{Q}_1' \cap (\bigcup_i \dot{Q}_i)$ consists of a finite number of simple closed curves. We call them the *cut lines on* $\dot{Q}_1'$. By the usual method, we are going to delete these cut lines from $\dot{Q}_1'$, replacing $\mathfrak{D}$ by an equivalent one. Take out one of the innermost cut lines on $\dot{Q}_1'$, and name it c. Then there is a disk E on $\dot{Q}_1'$ bounded by c such that there are no more cut lines on E. First we are going to delete c without getting new cut lines on $\dot{Q}_1'$. Suppose $c \subset \dot{Q}_i \cap \dot{Q}_1'$. Since $\dot{Q}_i \cap E = c$ the following two cases are to be considered:

Case I: $E \subset Q_i$ and Case II: $E \subset Q_i^c$.

Case I. c divides $\dot{Q}_i$ into two disks D_1, D_2 such that $D_1 \cap D_2 = \dot{D}_1 = \dot{D}_2 = c$ and $D_1 \cup D_2 = \dot{Q}_i$. E divides Q_i into two cubes Q_{i1}, Q_{i2} such that $E = Q_{i1} \cap Q_{i2}$, $Q_{i1} \cup Q_{i2} = Q_i$ and $\dot{Q}_{ij} = D_j \cup E$ $(j=1, 2)$. We put hereafter $l \cap \dot{Q}_i = \{C, D\}$.

The following three cases actually occur in this case.

(0) Neither A nor B is contained in E.

(1) One of the A, B is contained in E and the other is not contained in E.

(2) Both A and B are contained in E.

Case I (0). $E \subset Q_i$. $A, B \notin E$.

In this case, either $C, D \in D_1$ or $C, D \in D_2$, because $l \cap \dot{Q}_{ij} = l \cap D_j$ $(j=1, 2)$ must consist of even number of points. Without loss of generality we may assume that $C, D \in D_1$ as Fig. 6.

Then $l \cap Q_{i2} = \emptyset$. For, if $l \cap Q_{i2} \neq \emptyset$, then form the facts $l \cap \dot{Q}_{i2} = \emptyset$ and $l \cap Q_{i2}^c \neq \emptyset (\ni C, D)$, it follows that l is separable, which contradicts our first assumption.

Hence $l \cap Q_{i2} = \emptyset$. Therefore $l \cap Q_i = l \cap Q_{i1}$. Then we cut off Q_{i2} from Q_i. Shifting slightly all the vertices of a certain simplicial decomposition of $\dot{Q}_{i1}$ on E to one direction, we can delete the cut line c from $\dot{Q}_1'$ as shown in Fig. 7, without giving rise to any new cut lines on $\dot{Q}_1'$ and without changing the other circumstances. We write the cube thus obtained still by the same symbol Q_{i1}. Then replacing (l_i, Q_i) by (l_i, Q_{i1}) in the decomposition system $\mathfrak{D}$, we obtain a decomposition system $\tilde{\mathfrak{D}}$ which is obviously equivalent to $\mathfrak{D}$. Since c is deleted, the number of

6) Such simplicial decomposition $\mathfrak{Z}$ is obtained by refining arbitrary given one.

the cut lines on $\dot{Q}_1'$ is diminished at least by one from the original one. If $C, D \in D_2$, then we may merely exchange the number 1 and 2 in the above process.

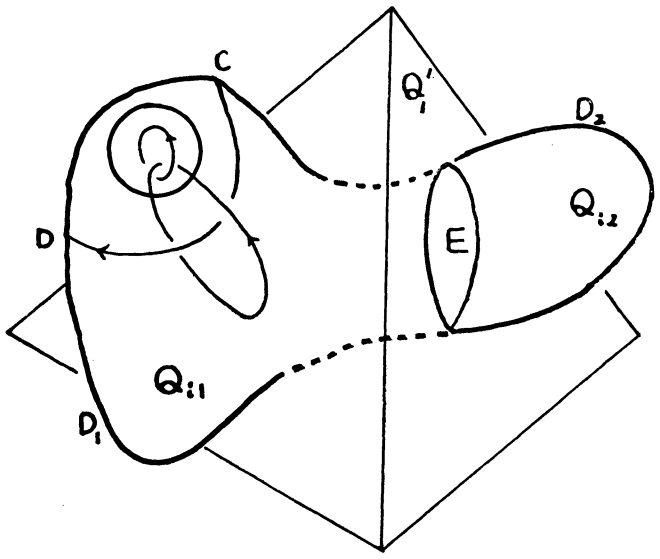

Fig. 6.

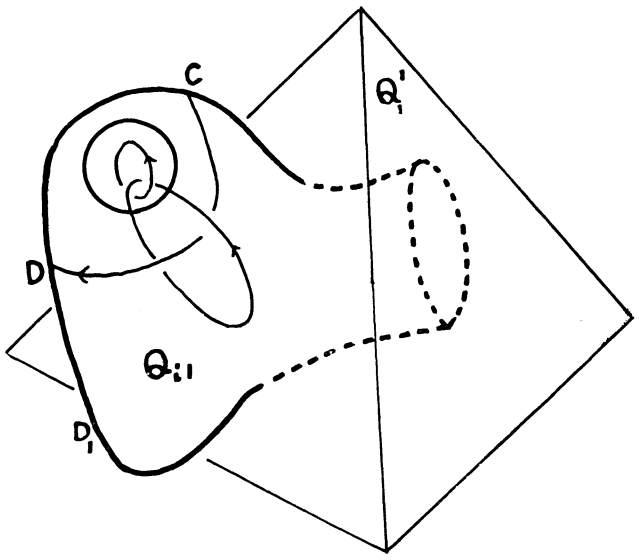

Fig. 7.

Case I (1). $E \subset Q_i$. $A \in E, B \notin E$.
In this case one of C, D is contained in D_1 and the other is contained

in D_2. We may assume without loss of generality that $C \in D_1$ and $D \in D_2$. By the definition of the decomposition system $l_i = l - (Q^c + Q_j + \cdots + Q_l)$, where $Q_j, \cdots, Q_l$ are all the cubes of $\mathfrak{D}$ in $\operatorname{Int} Q_i$. Let $l_i^* = \overline{l_i - v_i}$, where v_i is the joining arc of l on $\dot{Q}_i$ and let $l_i^* \cap Q_{i1}$, $l_i^* \cap Q_{i2}$ represent l_{i1}, l_{i2} in Q_{i1}, Q_{i2} respectively. Then it is easy to see that $l_i = l_{i1} \cdot l_{i2}$. Since l_i is prime, one of l_{i1}, l_{i2} must be trivial. We may assume without loss of generality that l_{i2} is trivial. Then by Théorem 4, $l_i \approx l_{i1}$ (Fig. 8).

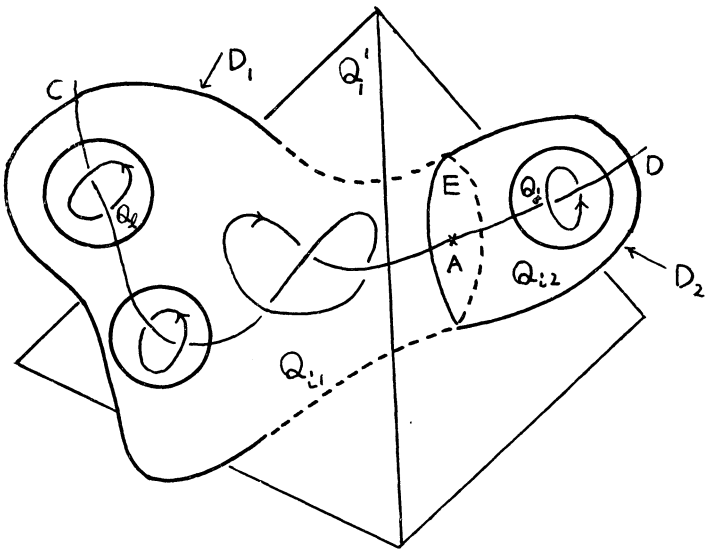

Fig. 8.

Then we cut off Q_{i2} from Q_i. Thereafter deforming Q_{i1} in the same way as Case I (0), we delete the cut line c (Fig. 9). Replacing (l_i, Q_i) by (l_{i1}, Q_{i1}) in $\mathfrak{D}$, we obtain a decomposition system $\tilde{\mathfrak{D}}$ which is obviously equivalent to $\mathfrak{D}$.

Case I (2). $E \subset Q_i$. $A, B \in E$.

In this case, it follows without loss of generality that $C, D \in D_1$. Then we may assume that the joining arc v_i of l_i^* on $\dot{Q}_i$ is contained in D_1. Let $l \cap Q_{i2}$ represent l_{i2} in Q_{i2} and let the rest link of l_i with respect to Q_{i2} be l_{i2}. Then $l_i = l_{i1} \cdot l_{i2}$ as shown in Fig. 10. Since l_i is prime, one of l_{i1}, l_{i2} must be trivial.

First suppose that l_{i1} is trivial. Then we cut off Q_{i1} from Q_i. Deforming then Q_{i2} by the usual way, we may delete the cut line c. Since l_{i1} is trivial, $l_{i2} \approx l_i$. Moreover $l \cap \dot{Q}_{i2}$ clearly consists of just two points A, B. Replacing then (l_i, Q_i) by (l_{i2}, Q_{i2}) in $\mathfrak{D}$, we obtain a decomposition system $\tilde{\mathfrak{D}}$ which is obviously equivalent to $\mathfrak{D}$.

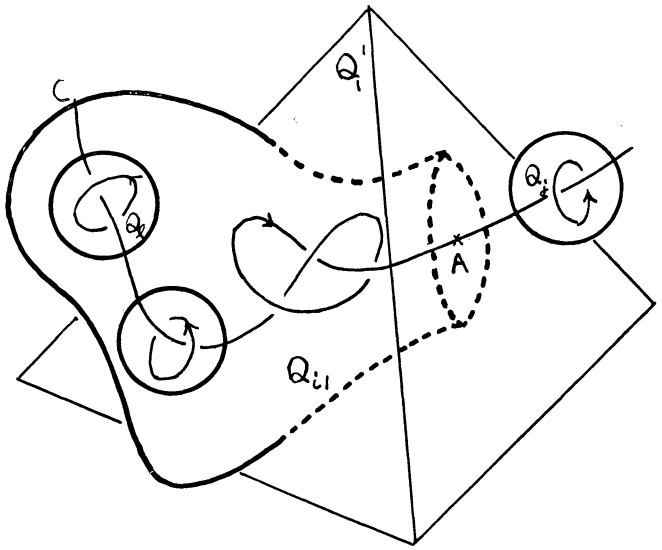

Fig. 9.

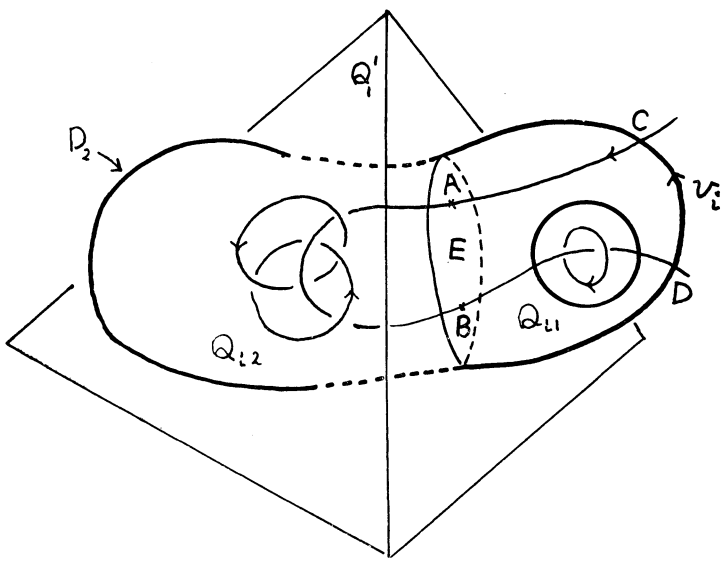

Fig. 10.

Next suppose that l_{i2} is trivial. It is easy to see that either $l \cap Q_{i2} \subset Q_1'$ or $l \cap Q_{i2} \subset Q_1'^c$.

Suppose that $l \cap Q_{i2} \subset Q_1'^c$. Then $l-(l \cap Q_{i2}) \subset Q_1'$. Let u be an arc joining A and B on E as shown in Fig. 11. Then since (l_1', Q_1') is an end of $\mathfrak{D}'$, $(l-(l \cap Q_{i2})) \cup u \approx l_1'$. Set $(l-(l \cap Q_{i2})) \cup u = l'$ and $l' \cap Q_i = l_{i1}$

and let the rest link of l' with respect to Q_i be l''. Then obviously $l'=l_{i1}\cdot l''$. Since l_1' is prime and since l_{i1} is not trivial by assumption, l'' must be trivial. Then $\mathfrak{D}$ does not satisfy the condition (D IV), which contradicts that $\mathfrak{D}$ is a decomposition system of l.

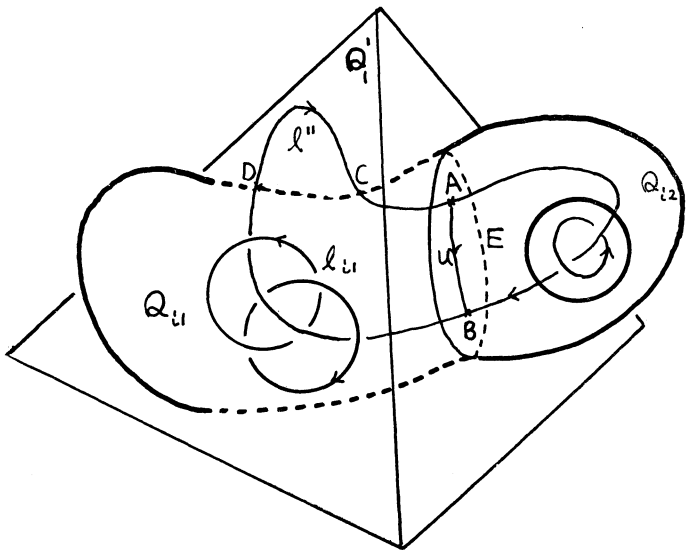

Fig. 11.

Hence we have $l\cap Q_{i2}\subset Q_1'$. Since (l_1', Q_1') is an end of $\mathfrak{D}'$ and l_{i2} is trivial, one and only one cube of $\mathfrak{D}$, say Q_1, is contained in Q_{i2} as shown in Fig. 12. Then it is easy to see that (l_1, Q_1) is an end of $\mathfrak{D}$ and $l_1\approx l_1'$ and $l_1^*\subset l_1'^*$. When l_{i2} is trivial in Case I (2), thus Lemma 3 is proved.

Case II. $E\subset Q_i^c$.

E divides Q_i^c into two cubes M_1, M_2 such that $M_1\cap M_2=E$, $M_1\cup M_2=Q_i^c$ and $M_j=E\cup D_j$ $(j=1, 2)$. Since there is no cut line on E, one of M_1 or M_2, say M_1, is contained in $Q_1'^c$.

Let E, D_1, D_2, etc. have the same meanings as in Case I. There are three cases, Case II (0), Case II (1) and Case II (2) to be considered.

Case II (0). $E\subset Q_i^c$. $A, B\notin E$.

If $l\cap M_1=\emptyset$, then replace Q_i by $\tilde{Q}_i=Q_i\cup M_1$. Then we delete c by the usual way as shown in Fig. 13, and replace (l_i, Q_i) by $(l_i, \tilde{Q}_i)$ in $\mathfrak{D}$. $\tilde{\mathfrak{D}}=\{(l_1, Q_1), \cdots, (l_i, \tilde{Q}_i), \cdots, (l_n, Q_n)\}$ thus obtained is obviously a decomposition system of l equivalent to $\mathfrak{D}$. Therefore we assume below that $l\cap M_1\neq\emptyset$.

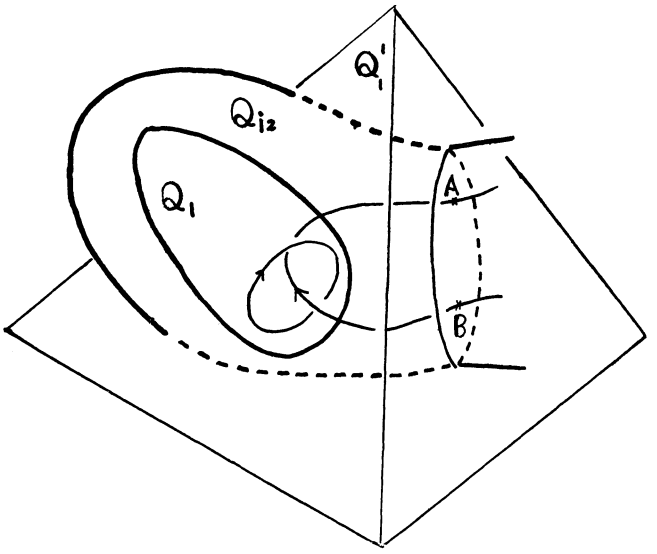

Fig. 12.

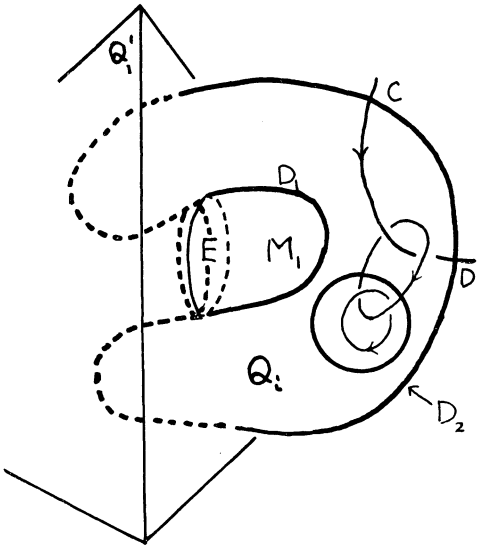

Fig. 13.

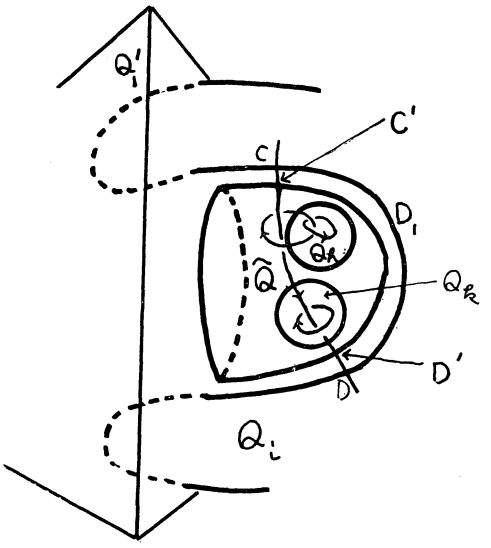

Fig. 14.

From the above assumption and from the fact that $A, B \notin E$, both C and D must be on D_1 since l is non separable. We take a cube $\tilde{Q}$ in $\mathrm{Int}M_1$ so close by M_1 that $l \cap \dot{\tilde{Q}} = \{C', D'\}$ and CC', DD' are line segments and $\dot{\tilde{Q}} \cap \dot{Q}_j = \emptyset$ $(j=1, \cdots, n)$ as shown in Fig. 14. Let $Q_h, \cdots, Q_k$ be all the cubes of $\mathfrak{D}$ contained in $\tilde{Q}$ (there may be no such cubes). It is

easy to see that $l \subset M_1 \cup Q_i$. Since there is no cube in $\mathfrak{D}$ which contains $\tilde{Q}_i$, one of $Q_i^c, Q_h^c, \cdots, Q_k^c$, say Q_i^c must coincide with some cube of $\mathfrak{D}$, say Q_1. If we set $l-(\tilde{Q}^c+Q_h+\cdots+Q_k)=\tilde{l}$, then clearly $\tilde{l} \approx l_1$. Further it is clear that $l-(\tilde{Q}+Q_j+\cdots+Q_l) \approx l_i$, where $Q_j, \cdots, Q_l$ are all the cubes of $\mathfrak{D}$ in $\operatorname{Int} Q_i$. Then replacing (l_1, Q_1) by equivalent $(\tilde{l}, \tilde{Q})$ and (l_i, Q_i) by equivalent $(l-(\tilde{Q}+Q_j+\cdots+Ql), \tilde{Q}^c)$ in $\mathfrak{D}$, we obtain a decomposition system $\tilde{\mathfrak{D}}$ of l which is equivalent to $\mathfrak{D}$. Thus the cut line c is deleted from $\dot{Q}_1'$, and from the way of the construction of $\tilde{\mathfrak{D}}$, there arise no new cut lines on $\dot{Q}_1'$.

Case II (1). $E \subset Q_i^c$. $A \in E, B \notin E$.

In this case, one of C, D is contained in D_1 and the other is contained in D_2. We may assume without loss of generality that $C \in D_1$. We take a cube $\tilde{Q}$ in Int M_1 so close by M_1 that $l \cap \dot{\tilde{Q}} = \{A', C'\}$ and AA', CC' and line segments and $\dot{\tilde{Q}} \cap \tilde{Q}_j = \emptyset$ $(j=1, \cdots, n)$. Let $Q_h, \cdots, Q_k, Q_j, \cdots, Q_l$ and $\tilde{l}$ have the same meanings as in Case II (0).

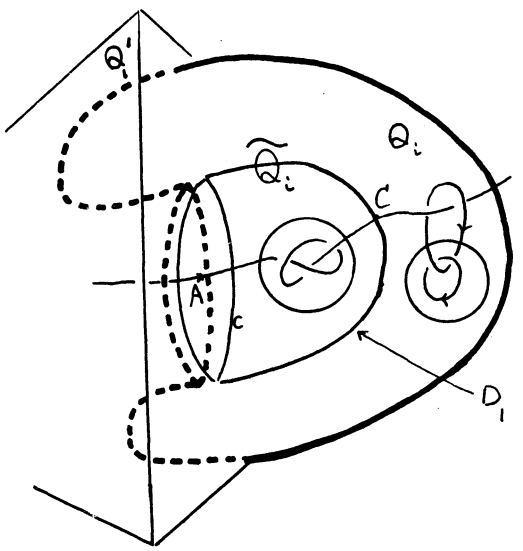

Fig. 15.

If $\tilde{l}$ is trivial, then we replace Q_i by $\tilde{Q}_i = Q_i \cup M_1$. It is clear that $\tilde{Q}_i$ is also an admissible cube of l. Then obviously $l_i = l-(Q_i^c+Q_j+\cdots+Q_l) \approx l-(\tilde{Q}_i^c+Q_j+\cdots+Q_l+Q_h+\cdots+Q_k)$. We then delete c by the usual way as shown in Fig. 15. Then replaing (l_i, Q_i) by $(l-(\tilde{Q}_i^c+Q_j+\cdots+Q_l+Q_h+ +Q_k), \tilde{Q}_i)$ in $\mathfrak{D}$, we obtain a decomposition system $\tilde{\mathfrak{D}}$ of l which is equivalent to $\mathfrak{D}$.

If $\tilde{l}$ is non trivial, then the following two cases actually occur: (A) There exists a Q_r in $\mathfrak{D}$ such that $\tilde{Q}_i \subset \mathrm{Int}\, Q_r$. (B) There is no such Q_r as (A).

Case (A). In this case we choose Q_r such that there is no Q_t in $\mathfrak{D}$ such as $\tilde{Q}_i \subset Q_t \subset Q_r$ as shown in Fig. 16. Let $Q_i, Q_j, \cdots, Q_s$ be all the

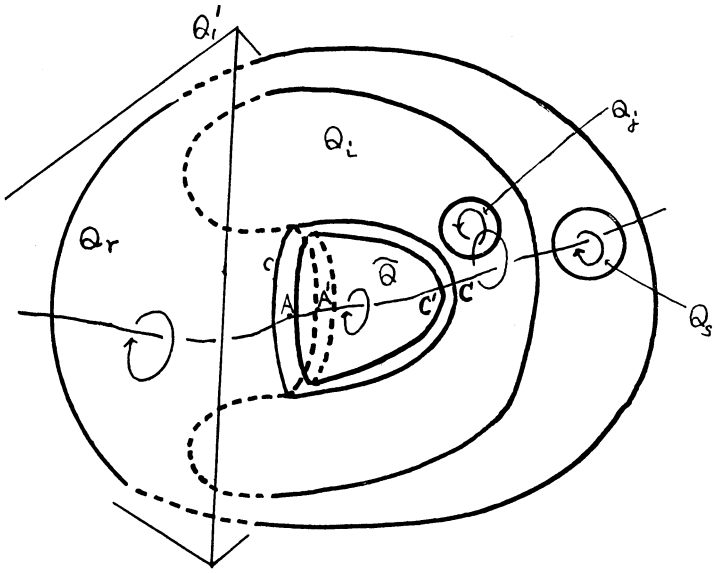

Fig. 16.

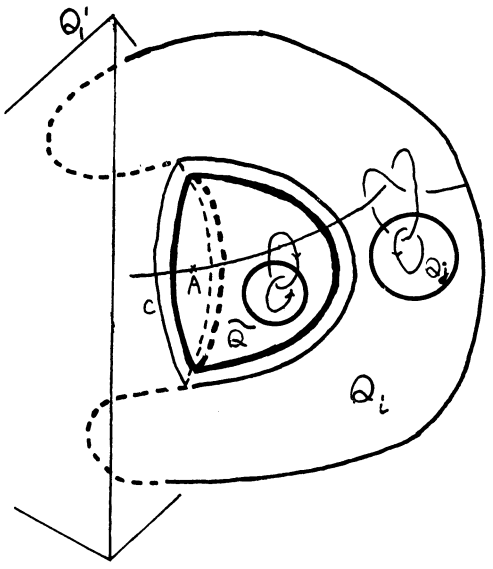

Fig. 17.

cubes in $\mathfrak{D}$ contained in Q_r. Then it is easy to see that $l-(Q_r^c+\tilde{Q}+Q_j+\cdots+Q_s)\approx l_i$. Therefore $\tilde{\mathfrak{D}}=\{(l_1, Q_1), \cdots, (l-(Q_r^c+\tilde{Q}+Q_j+\cdots+Q_s), Q_r) \cdots, (l_n, Q_n)\}$, which is obtained by replacing $(l_i, \tilde{Q}_i)$ by $(l-(Q_r^c+\tilde{Q}+Q_j+\cdots+Q_s), Q_r)$, is obviously a decomposition system of l equivalent to $\mathfrak{D}$.

Case (B). By the definition of the decomposition system, one of $Q_i^c, Q_h^c, \cdots, Q_k^c$ must coincide with some cube of $\mathfrak{D}$. We may assume without loss of generality that $Q_i^c=Q_1$. Then it is easy to see that $\tilde{l}\approx l_1$. Replacing (l_1, Q_1) by $(\tilde{l}, \tilde{Q})$ and (l_i, Q_i) by $(l-(\tilde{Q}^c+Q_j+\cdots+Q_l), \tilde{Q}^c)$, we obtain a decomposition system $\tilde{\mathfrak{D}}$ of l which is equivalent to $\mathfrak{D}$ (Fig. 17). Thus in Case II (1), the cut line c is deleted without getting new cut lines on $\dot{Q}_1'$.

Case II (2). $E\subset Q_i^c$. $A, B\in E$.

We need not consider this case. For, if we choose any other one of the innermost cut lines on $\dot{Q}_1'$, then we can delete it, because it belongs to Case I (0) or Case II (0). Next we delete another one of the innermost cut lines. Thus finally there remains only one cut line c on $\dot{Q}_1'$. The c is a cut line of Case I (0). Hence we can delete c from $\dot{Q}_1'$.

Repeating step by step the above deleting process, we can delete finally all the cut lines from $\dot{Q}_1'$. Let the decomposition system of l finally obtained be $\mathfrak{D}''=\{(l_1'', Q_1''), \cdots, (l_n'', Q_n'')\}$. Then $\dot{Q}_1'\cap(\bigcup_i \dot{Q}_i)=\emptyset$. From the condition (D V) it follows directly that there is at least one cube of $\mathfrak{D}$, say Q_1'', such that $Q_1''\cap Q_1'\neq\emptyset$. Then the following two cases are to be considered:

(1) $Q_1''\subset \mathrm{Int}\ Q_1'$. (2) $Q_1'\subset \mathrm{Int}\ Q_1''$.

Case (1). Let $l\cap Q_1''$ represents $\tilde{l}_1$. Then clearly $l_1'=\tilde{l}\cdot(l-Q'^c+Q_1''))$. Since l_1' is prime and $\tilde{l}$ is non trivial, $l-(Q'^c+Q_1'')$ must be trivial, accordingly $l_1'=\tilde{l}$ as shown in Fig. 18. Then there cannot exist any cube of $\mathfrak{D}''$ in $\mathrm{Int}\,Q_1''$. Hence $l\approx\tilde{l}_1''$ and (l_1'', Q_1'') is an end of $\mathfrak{D}''$ and obviously $l_1''^*=l\cap Q_2''=l\cap Q_1'=l_1'^*$. Thus in Case (1), Lemma 3 is proved.

Case (2). We may suppose that there is no Q_1'' of $\mathfrak{D}''$ such that $Q_1'\subset \mathrm{Int}\,Q_i''$. If (l_1'', Q_1'') is an end of $\mathfrak{D}''$, then it is easy to see that $l_1'\approx l_1''$, since the circumstances are the same as Case (1). Therefore $(l_1'', Q_1'')\approx(l_1', Q_1')$ and $l_1'^*\subset l_1''^*$.

Hence suppose that (l_1'', Q_1'') is not an end of $\mathfrak{D}''$. Let $Q_i'', \cdots, Q_j''$ be all the cubes of $\mathfrak{D}''$ contained in Q_1''. Then take out one of the maximal cubes from $Q_i'', \cdots, Q_j''$ and put it Q_k'', i.e. there is no Q_j'' such that $Q_k''\subset Q_j''\subset Q_1''$. Then it is easy to see that $l_1''\approx l_1'$ and $l_k''\approx l-(Q_1''^c+Q_i''+\cdots+Q_1'+\cdots+Q_j'')$ as shown in Fig. 19. Therefore

replacing (l''_k, Q''_k) by $(l-(Q''^c_1+Q''_i+\cdots+Q_1'+\cdots+Q''_j), Q''_1)$ and (l_1', Q''_1) by $(l_1' \; Q_1')$ in $\mathfrak{D}''$, we have a decomposition system of l equivalent to $\mathfrak{D}''$, which we write still by $\mathfrak{D}''$. Then (l_1', Q_1') is an end of $\mathfrak{D}''$. Hence Lemma 3 is also proved in Case (2). Thus the proof of Lemm 3 is complete.

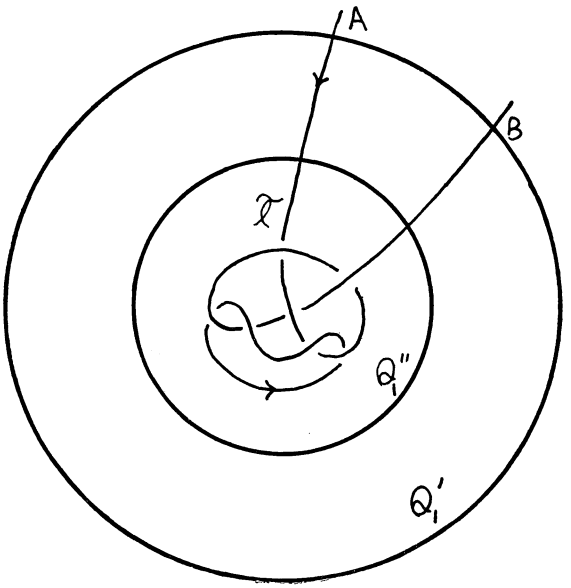

Fig. 18.

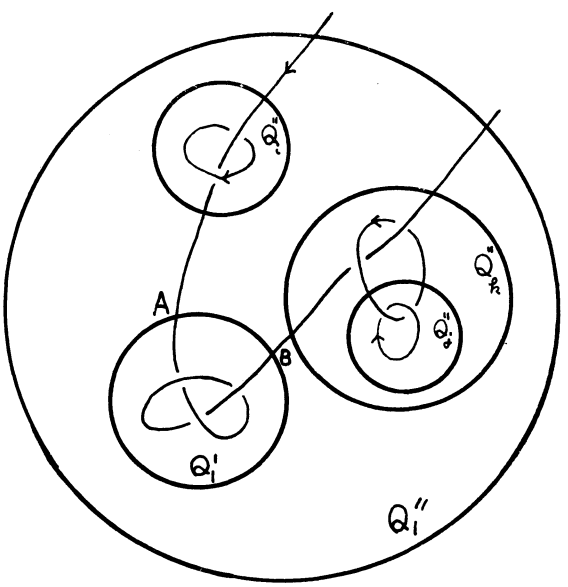

Fig. 19.

Main Theorem. *Every non trivial and non separable link can be decomposed uniquely into prime links.*

Proof. Let l be an arbitrary given non trivial and non separable link and let $\mathfrak{D}=\{(l_1, Q_1), \cdots, (l_n, Q_n)\}$, $\mathfrak{D}'=\{(l_1', Q_1'), \cdots, (l_m', Q_m')\}$ be decomposition systems of l. Then by the use of Lemma 3 we can find an end of $\mathfrak{D}$, say (l_1, Q_1), and an end of $\mathfrak{D}'$, say (l_1', Q_1'), such that $(l_1, Q_1)\approx(l_1', Q_1')$ and one of l_1^*, $l_1'^*$ is contained in the other. It is obviously seen that $l-Q_1\approx l-Q_1'$ and $l\approx(l-Q_1)\cdot l_1\approx(l-Q_1')\cdot l_1'$. Then $\tilde{\mathfrak{D}}=\{(l_2, Q_2), \cdots, (l_n, Q_n)\}$ and $\tilde{\mathfrak{D}}'=\{(l_2', Q_2'), \cdots, (l_m', Q_m')\}$ are decomposition systems of $l-Q_1$ and $l-Q_1'$ respectively. As is well known, there exists a semilinear mapping φ which maps $l-Q_1'$ onto $l-Q_1$. Then the image $\varphi\tilde{\mathfrak{D}}'=\{(\varphi l_2', \varphi Q_2'), \cdots, (\varphi l_m', \varphi Q_m')\}$ of $\mathfrak{D}$ by φ is also a decomposition system of $l-Q_1$ and clearly $\varphi\tilde{\mathfrak{D}}'\approx\tilde{\mathfrak{D}}'$. Next we apply the above method to $\tilde{\mathfrak{D}}$ and $\varphi\tilde{\mathfrak{D}}'$. Thus taking out the equivalent ends from $\mathfrak{D}$ and $\mathfrak{D}'$ step by step, we obtain finally the conclusion of the Main Theorem.

(Received September 29, 1958)

References

[1] H. Schubert: Die eindeutige Zerlegbarkeit eines Knotens in Primknoten, Sitzungsber. Akad. Wiss. Heidelberg, math.-nat. Kl., **3**. Abh. (1949).

[2] H. Seifert: Über das Geschlecht von Knoten, Math. Ann. **110**, 571–592 (1935).