Osaka University Knowledge Archive

Title	Friction Stir Welding of Mg-Al-Zn Alloys(Physics, Processes, Instruments & Measurements)
Author(s)	Nakata, Kazuhiro; Kim, Young Gon; Ushio, Masao
Citation	Transactions of JWRI. 2002, 31(2), p. 141-146
Version Type	VoR
URL	https://doi.org/10.18910/4257
rights	
Note	

Osaka University Knowledge Archive : OUKA

https://ir.library.osaka-u.ac.jp/

Osaka University

Friction Stir Welding of Mg-Al-Zn Alloys †

NAKATA Kazuhiro *, KIM Young Gon ** and USHIO Masao *

Abstract

Extruded and cast plates of AZ type magnesium alloys were successfully joined by friction stir welding (FSW). The effects of FSW conditions on the formation of defects were revealed in relation to tool rotation speed and specimen travel speed. Magnesium alloys with higher aluminum contents became difficult to be joined and the optimum condition without defect was restricted in a narrow condition range. The structure of the stirred zone was a fine-grained recrystallized structure even in the case of cast AZ91D. FSW joints had better mechanical properties than those of GTA welded joints. In particular the toughness of the stirred zone increased more than that of the base metal.

KEY WORDS: (FSW) (magnesium alloy) (structure) (hardness) (tensile strength)

1. Introduction

FSW (Friction Stir Welding) is a newly developed joining process[1),2)], and expected to prove a high by efficient joining process, especially for lightweight materials, such as aluminum and magnesium alloys, due to the lower deformation and lower heat affection in FSW joints compared with those in conventional fusion welding processes. Thus, there have been many research works on FSW of aluminum alloys and successful applications to aluminum alloy constructions such as ship, railway car, aerospace applications and so on[3)-5)]. On the other hand, FSW of magnesium alloys is much less developed than for aluminum alloy in both research and application fields[6),7)].

This research work has evaluated the joining characteristic of Mg-Al-Zn magnesium alloys by FSW.

2. Experimental procedures

2.1 Material used

As a typical Mg-Al-Zn magnesium alloy, AZ31 and AZ61 extruded plates and AZ91D cast plate were used for FSW. Chemical compositions of these plates were shown in **Table 1**, in which Al contents ranged from 3 to 9 mass%. The other elements were almost the same level. The dimension of the plate was 100 mm in width, 200 mm in length and 5 mm in thickness, and heat treating condition was the as-extruded condition in AZ31 and AZ61 and the as-cast condition in AZ91D.

Table 1 Chemical compositions of magnesium alloys.

Alloy	Chemical Composition (mass%)				Remark
	Al	Zn	Mn	Mg	
AZ31	3.01	0.76	0.51	Bal.	Extruded
AZ61	6.49	0.81	0.29	Bal.	Extruded
AZ91D	9.17	0.65	0.28	Bal.	Casted

2.2 FSW condition

Tool rotation speed, Rt and specimen travel speed (welding speed), V were varied from 500 to 3000 rpm and 50 to 2000 mm/min, respectively. The direction of tool rotation was anti-clockwise. A tool dimension was 15 mm in shoulder diameter, 5 mm in pin (probe) diameter and 5 mm in pin length with a clockwise screw pin. A square butt joint was used, and in advance of

† Received on January 15, 2003
* Professor, Osaka University
** Graduate Student, Osaka University

Transactions of JWRI is published by Joining and Welding Research Institute of Osaka University, Ibaraki, Osaka 567-0047, Japan

FSW groove surfaces were machined and degreased with acetone. Tilt angle was 3 degree and the gap between a pin tip and a backing plate was 0.1 mm.

2.3 Evaluation of metallurgical characteristics and mechanical properties of FSW joint

Defects in a FSW joint such as voids and lack of bonding were evaluated by visual and X-ray radiography inspections of the joint. Metallurgical inspection was done on a cross section of the joint after polishing and etching with 5% nital. Hardness measurement of the joint was also done on the cross sections with micro-vickers hardness tester at 0.49N load.

Tensile tests transverse to the welding direction of the joint were carried out by using the tensile test specimen as shown in **Fig.1**. Impact toughness of the stirred zone at room temperature was evaluated by a Charpy impact test using a sub-sized specimen with 2 mm depth V-notch in the stirred zone as shown in **Fig.2 (a)** and **(b)**, showing the location of the specimen in the FSW joint and its geometry, respectively.

3. Results and Discussions

3.1 Effect of FSW parameters on the formation of the FSW joint

Figure 3 (a) and **(b)** show the appearance and the X-ray radiograph of AZ61 FSW joint at different FSW parameters, respectively. At a constant travel speed 200 mm/min in (a), joint defects were observed inside the joint at low tool rotation speed 500 rpm. This defect did not appear superficially, but was revealed by X-ray radiograph, and lay linearly along a joint line. However, it disappeared at higher rotation speed, and a defect free joint was obtained at medium tool rotation speed, 1000 to 1500 rpm. Much higher tool rotation speed, however, again caused a joint defect, which was observed by visual inspection on the joint top surface. As to the travel speed in (b) at a constant tool rotation speed, 1500 rpm, increasing travel speed caused a joint defect, which appeared clearly on the top surface of the joint as a groove-like defect, namely lack of bonding.

Joint defects were likely to form at low tool rotation speed or high travel speed. These were caused by insufficient plastic metal flow due to a relatively low temperature rise. Another defect observed at high tool rotation speed was caused by excess expelling of the plastic metal as shown in (a).

Figure 4 shows collectively the optimum FSW conditions for each magnesium alloy, in which a defect free FSW joint was formed at given tool conditions described in 2.2. Large differences in the optimum condition zone are apparent, especially in each limited travel speed. In Mg-Al-Zn alloy, increasing aluminum content increases the strength of the alloy, but decreases plastic formability especially with lots of second phase, $\beta - Al_{12}Mg_{17}$ intermetallic compound as in case of AZ91D. Thus, the optimum FSW condition of AZ91D is limited to a narrow range as shown in Fig.4 in comparison with AZ31 without second phase. AZ61 showed small amount of second phase. **Figure 5** shows typical defects in the cross section of FSW joint.

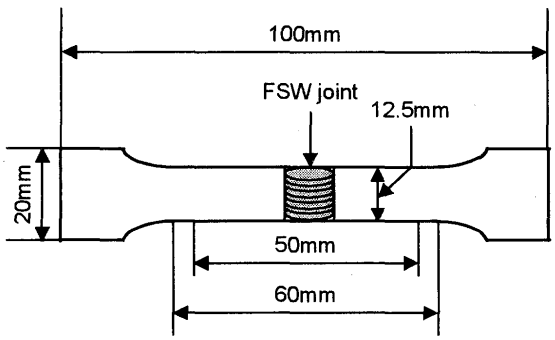

Fig.1 Tensile test specimen.

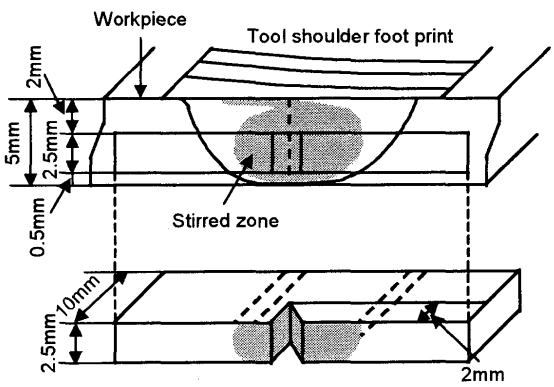

Fig.2 Schematic drawings of Charpy impact test specimen, (a) location at a workpiece and (b) geometry (2mm V-notch).

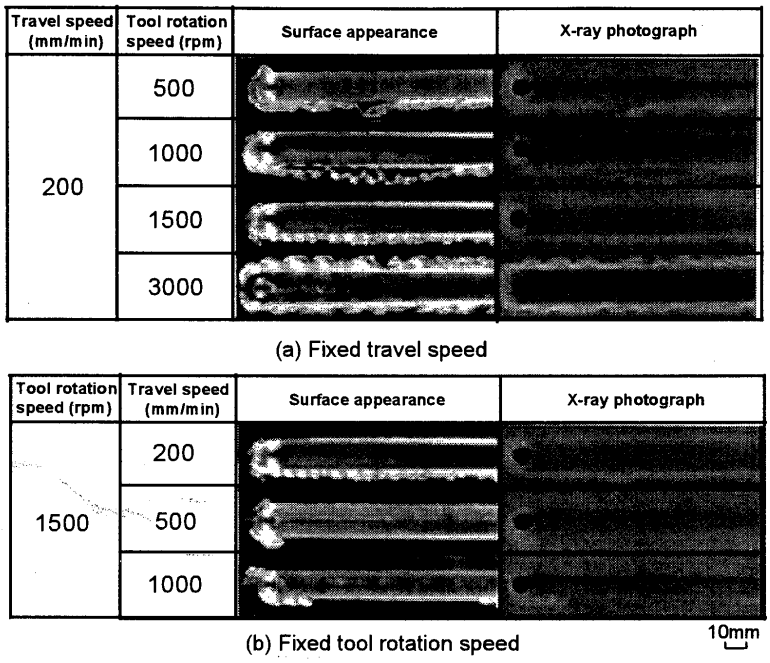

Fig.3 Surface appearance and X-ray photograph of FSW joints (AZ61, 5mm thickness).

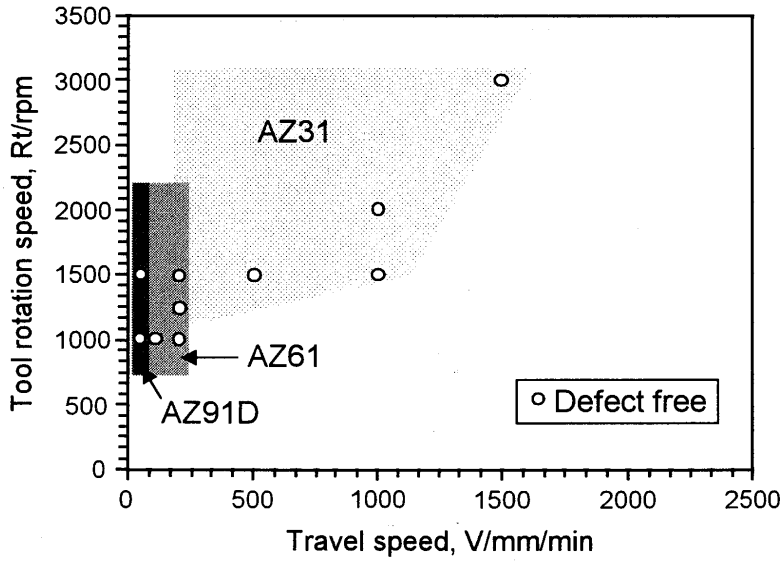

Fig.4 Defect free zones in FSW (Mg alloys, 5mm thickness).

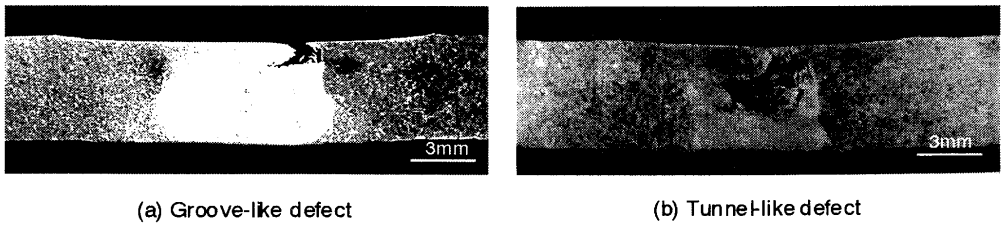

Fig.5 Typical FSW defect in cross sections of AZ91D,
(a) groove-like defect, (b) tunnel-like defect.

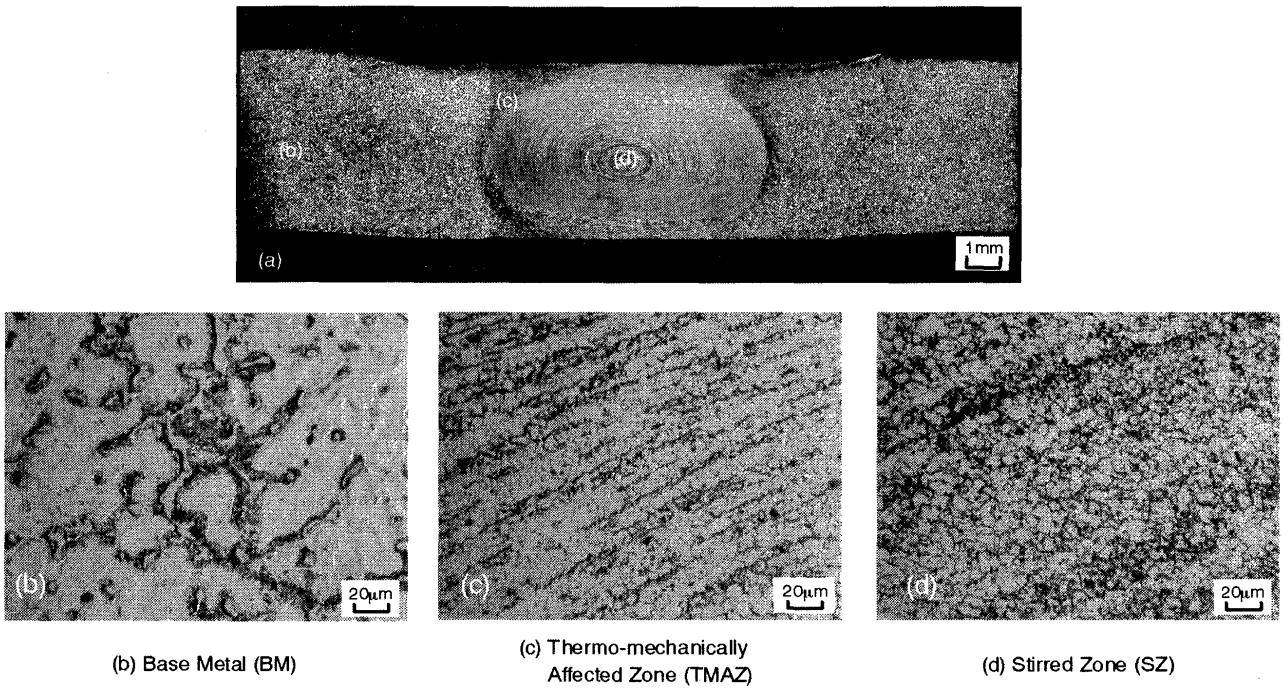

Fig.6 Macro and microstructural features of FSW joints (AZ91D, 5mm thickness, 1000rpm-50mm/min).

3.2 Structure

Figure 6 (a) shows a typical macrostructure of the cross section of the FSW joint of AZ91D, in which an onion ring pattern is clearly seen. Microstructures of base metal (BM), thermomechanically affected zone (TMAZ) and stirred zone (SZ) are shown in **(b)**, **(c)** and **(d)** in Fig.6. The base metal has a dendritic structure with $\beta - Al_{12}Mg_{17}$ phase, which was formed in non-equilibrium solidification by the casting. The plastic metal flow line is clearly observed at TMAZ. The structure in SZ is a fine-grained recrystallized structure, and apparently the base metal structure with coarse $\beta - Al_{12}Mg_{17}$ phase has disappeared due to dynamic recrystallization and resolution into the $\alpha - Mg$ matrix. Macroscopically similar structures were formed in AZ31 and AZ61 FSW joints.

3.3 Hardness

Figure 7 shows hardness profiles on cross section of the FSW joint. No obvious change in hardness was observed in AZ31 and AZ61, but apparently the hardness of SZ in AZ91D increased in comparison with base metal hardness. This is due to the fine grain size and the increase in the solution content of aluminum in $\alpha - Mg$ matrix due to the decomposition of $\beta - Al_{12}Mg_{17}$ phase.

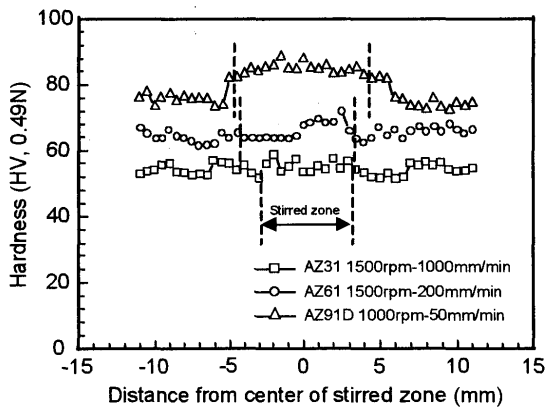

Fig.7 Hardness profiles of FSW joints in cross section.

3.4 Joint strength and toughness

Table 2 collectively shows the tensile strength and elongation of FSW joint and absorbed energy of the stirred zone comparing with those of a GTA welded joint[8] and base metal. FSW conditions are 1250 rpm and 200 mm/min for AZ31 and AZ61, and 1000 rpm and 50 mm/min for AZ91D. In AZ31 and AZ61, their FSW joint strengths are about 90% of each base metal, which are equal level to those of the GTA welded joint. FSW joints showed less elongation than those of base metal, but still larger than those of GTA welded joints. In

Table 2 Mechanical properties of FSW and GTAW joints.

Alloy	Process	Tensile strength (MPa)	Elongation (%)	Absorbed energy (J/cm^2)
AZ31	BM	251	13.2	9.3
	FSW	231	9.4	20.7
	GTAW*	222	5.3	12.2
AZ61	BM	308	15.2	8.7
	FSW	269	9.6	13.3
	GTAW*	265	7.0	9.9
AZ91D	BM	93	2.1	7.5
	FSW	115	-	8.6
	GTAW*	107	-	8.5

AZ91D, there was no difference in tensile properties between FSW and GTAW joints because the fracture position was in the base metal and caused by a cavity from a castings defect.

Figure 8 shows the room temperature toughness of the stirred zone in FSW joint and weld metal in GTAW joint in comparison with that of base metal as a function of aluminum content. FSW joint shows much higher toughness than GTAW joint and base metal, especially at low aluminum content. This is also due to the fine-grained recrystallized structure in the stirred zone.

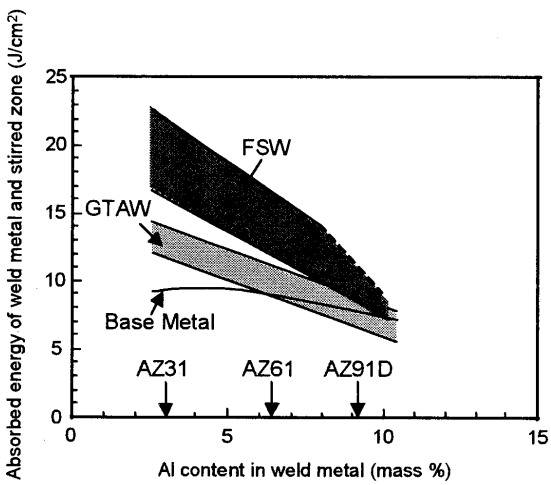

Fig.8 Comparison of absorbed energy of Mg alloys and those of stirred zone in FSW and weld metal in GTAW joints.

4. Conclusion

The application of FSW to joining Mg-Al-Zn magnesium alloys, AZ31 and AZ61 extruded plates and AZ91D cast plate and joint characteristics have been investigated. Main conclusions obtained are as follow;

(1) Magnesium alloys with higher aluminum contents become difficult to be joined and the optimum condition without defects is restricted into a narrow condition range.

(2) The structure of the stirred zone is a fine-grained recrystallized structure even in the case of cast AZ91D as well as AZ31 and AZ61.

(3) FSW joint has better mechanical properties than those of GTA welded joint. Joint strength was about 90% in the extruded plate in comparison with those of each base metal. Toughness of the stirred zone at room temperature has a higher value than that of each base metal evaluated by a Charpy impact test.

Acknowledgements

The authors would like to express their thanks to Mr. Y. Nagano, Showa Denko K.K. for FSW work.

References

1) W.M. Thomas et al: International Patent Application No. PCT/GB92/02203 and GB Patent Application No.9125978.8,6 Dec. 1991, U.S. Patent No. 5.460.317.
2) C.J. Dawes and W.M. Thomas: Friction Stir Joining of Aluminum Alloys, TWI Bulletin, 36(1995), 124.
3) Proceedings of 1st International Friction Stir Welding Symposium, TWI, USA, (June 1999).
4) Proceedings of 2nd International Friction Stir Welding Symposium, TWI, Sweden (June 2000).
5) Proceedings of 3rd International Friction Stir Welding

Symposium, TWI, Japan (September 2001)
6) T. Nagasawa et al: Proc. Magnesium Technology 2000, TMS, (2000), 383.
7) K. Nakata et al: Proc. 3rd Int. Friction Stir Welding Symp., TWI, Japan (Sept. 2001) or J. Japan Inst. of Light Metals, 51(2001), 528-533.
8) K. Nakata et al: Preprint of Annual meeting of JWS, 67(2000), 66-67.