Osaka University Knowledge Archive

| | |
|---|---|
| Title | Tandem Electron Beam Welding (Report IX) : High Speed Tandem Electron Beam Welding(Physics, Process, Instrument & Measurement) |
| Author(s) | Tomie, Michio; Abe, Nobuyuki; Arata, Yoshiaki |
| Citation | Transactions of JWRI. 1989, 18(2), p. 175-180 |
| Version Type | VoR |
| URL | https://doi.org/10.18910/4282 |
| rights | |
| Note | |

*Osaka University Knowledge Archive : OUKA*

https://ir.library.osaka-u.ac.jp/

Osaka University

# Tandem Electron Beam Welding (Report IX)†

## – High Speed Tandem Electron Beam Welding –

**Michio TOMIE*, Nobuyuki ABE* and Yoshiaki ARATA****

**Abstract**

*High speed wilding up to 15 m/min on SUS304 steel of 3 mmt was achieved by Tandem Electron Beam welding method. Sound bead without undercut, underfill, humping, overlap and spattering was obtained. Up to the welding speed of 15 m/min, welding characteristics in single electron beam welding were revealed for SUS304 stainless steel of 3 mmt. Welding defects such as undercut, underfill, humping and overlap occurred according to increasing welding speed. All defects were suppressed by Tandem Electron Beam welding with proper power ratio, Tandem Gap and oscillation of the second beam. Effect of Tandem parameters on bead appearance was investigated.*

**KEY WORDS :** (Tandem Electron Beam) (Electron Beam Welding) (High Speed Welding) (SUS304)

### 1. Introduction

High speed welding has been required for long time to decrease welding time and increasing productivity. However, for 3 mmt stainless steel, only a relatively low speed such as 2.5 m/min was reported for arc welding.[1] Electron beam, which has high energy density and high power, enables high speed welding which is very difficult for conventional welding method such as arc welding. However, it is also well known that the specific welding defects caused by its high energy density and high welding speed often occur such as undercut, underfill, humping, overlap, spattering and so on.

Tandem Electron Beam (TEB) welding has been researching to suppress such welding defects in high speed welding. Below welding speed of 3 m/min on 3 mmt stainless steel, these defects are suppressed and sound bead was obtained by TEB welding method.[2] In this report, TEB welding method was applied to 3 mmt stanless steel and sound bead was obtained up to 15 m/min. High speed photography was used for revealing the formation process and suppression process of overlapping.

### 2. High speed welding of thin plates by single electron beam welding

In order to investigate high speed welding characteristics of thin plates by single electron beam welding, SUS304 stainless steel thin plate of 3 mm thickness was welded at various beam power and welding speed. **Figure 1** shows welding characteristics of 3 mmt SUS304 stainless steel against beam current and welding speed. $a_b$ value is 1.0 and bead on plate welding was

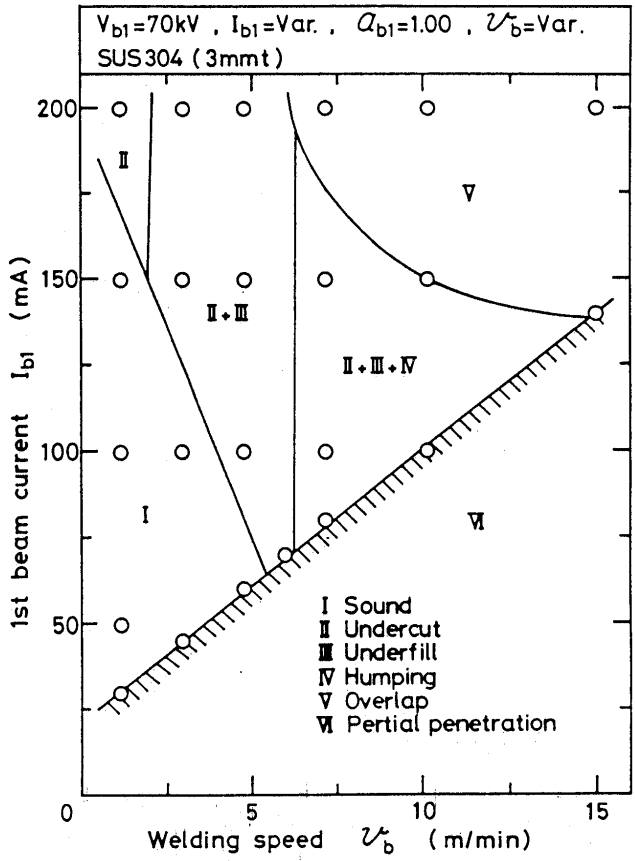


**Fig. 1** High speed electron beam welding characteristics of 3 mmt SUS304.

† Received on October 31, 1989
* Associate Professor
** Emeritus Professor

Transaction of JWRI is published by Welding Research Institute of Osaka University, Ibaraki, Osaka 567, Japan

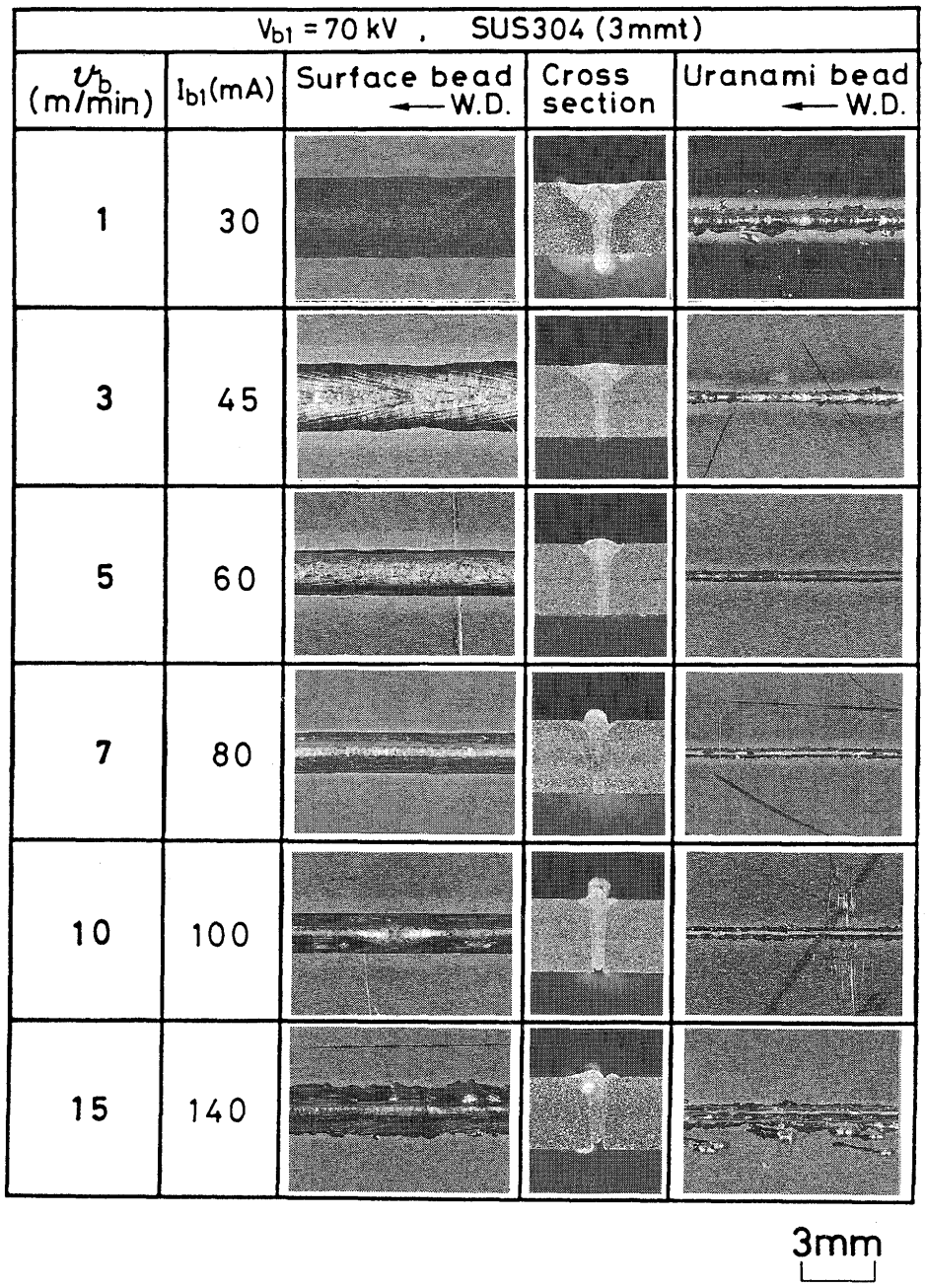


**Fig. 2** Bead appearnace and cross section at various welding speed.

performed. The threshold current which is required to pass through the specimen increases linearly with welding speed. Since beam current is proportional to power density, this means that the drilling force is the important factor for high speed welding. Over this threshold current, bead appearance was divided into 3 regions; sound bead (Ⅰ), intermediate bead (Ⅱ, Ⅲ, Ⅳ) and overlap bead(Ⅴ). In the intermediate region, there are undercut (Ⅱ), underfill (Ⅲ) and humping (Ⅳ). These 5 regions appear in order with increasing welding speed. At low speed below 6 m/min, sound bead was obtained. With increasing welding speed, undercut defect, underfill defect and humping came out. Overlap phenomenon appeared at $I_b$ =150 mA and $v_b$=15 m/min. When the beam current was higher than 150 mA, overlap phenomenon ovserved at lower welding speed such as 6 m/min.

**Figure 2** shows typical bead appearance and cross section at various welding sped on 3 mmt SUS 304. Beam current at each welding speed was threshold current for full penetration, and $a_b$ value is 1.0. Bead shape changes from the winecup bead to the parallel bead with increasing welding speed. This is caused by decrease of heat transfer to the direction perpendicular to welding direction with increasing welding speed. **Figure 3** shows surface bead width and uranami bead width at various welding speed. Surface bead width decreases with

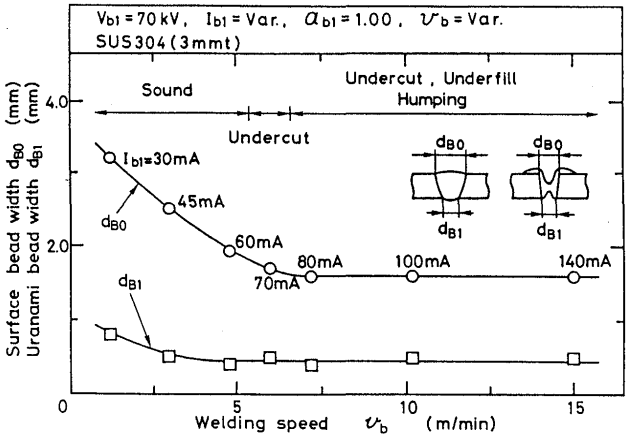


**Fig. 3** Welding speed dependence on surface and uranami bead width.

increasing welding speed. Over a welding speed of 6m/min, surface bead width shows constant value near the beam diameter. In this report, the region where surface bead width is larger than the beam diameter is called low speed region and the region where the surface bead width is near the beam diameter is called high speed region. For the plate thickness of 3 mm, sound bead and undercut bead belong to low speed region, while underfill, humping and overlap appear in high speed region.

## 3. Dynamic observation of high speed welding phenomena

**Figure 4** shows the layout of observation system. In order to suppress the light from welding region, a Xe short arc lamp with parabolic focusing mirror was positioned at an upper angle of 45° to the specimen and a 16 mm high speed camera was positioned along the welding direction at an upper angle of 70° to the specimen as shown in Fig. 4 Filming rate was 2000 frames per second.

**Figure 5** shows high speed photographs at each welding

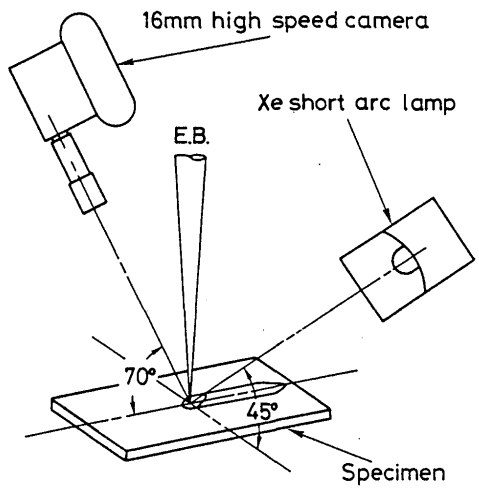


**Fig. 4** Experimental setup for high speed movie.

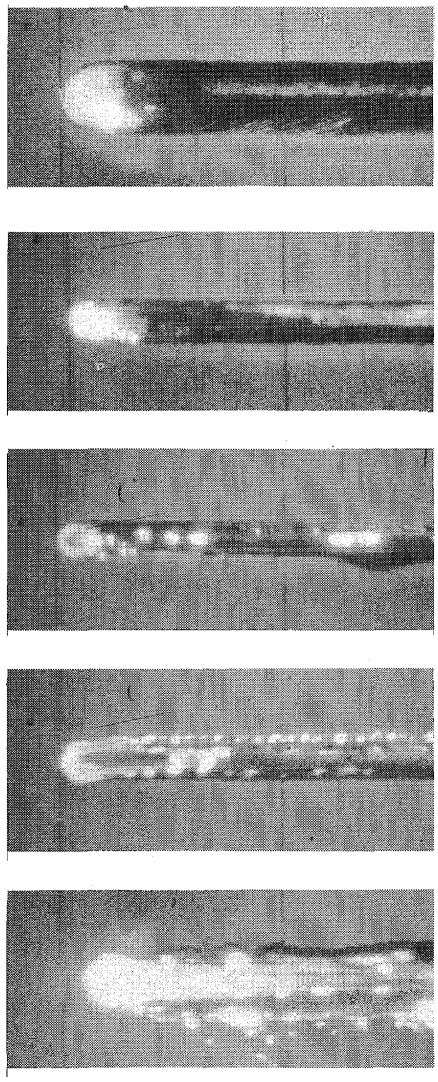

**Fig. 5** High speed photographs at various welding speed. a) 1 m/min, b) 5 m/min, c) 10 m/min, d) 15 m/min, e) 20 m/min

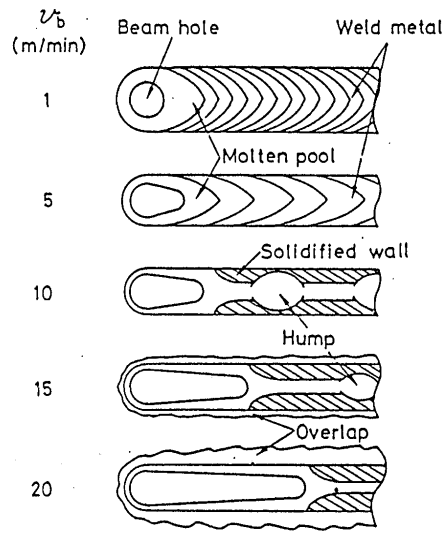


**Fig. 6** Schematic diagram of high speed photograph in single electron beam welding at various welding speed.

speed filmed by this system. **Figure 6** shows sketches of these photographs. At low speed region, bead width decreases with increasing welding speed, while in high speed region, it reaches to the beam diameter. Molten pool length and beam hole length increase with welding speed, while width of moltern pool is decreased by solidified wall growing on the side wall of bead. **Figure 7** shows dynamic observation of overlap phenomenon filmed by high speed camera. When the welding speed increases over 15 m/min, moltern metal spouts at the front of moltern pool, and it splashes backward on the surface of the specimen. The origin of overlap phenomenon in high speed welding is thought as the increase of beam hole length and the growth of solidified wall on the side wall of bead. **Figure 8** explains the mechanism of overlap phenomenon. When the welding speed is relatively low (a), beam hole length is short that molten metal can flow backward through around the beam hole. However, when the welding speed is very high (b), beam hole length becomes longer and bead width becomes narrower. Therefore, moltern metal generated at the front wall of the beam hole is hardly to flow backward spouting from around the front of the beam hole.

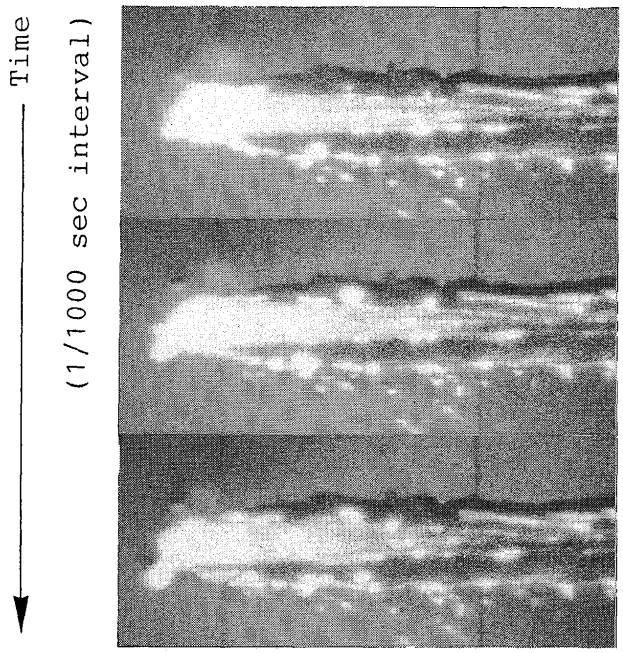


**Fig. 7** High speed photograph of overlap phenomenan.

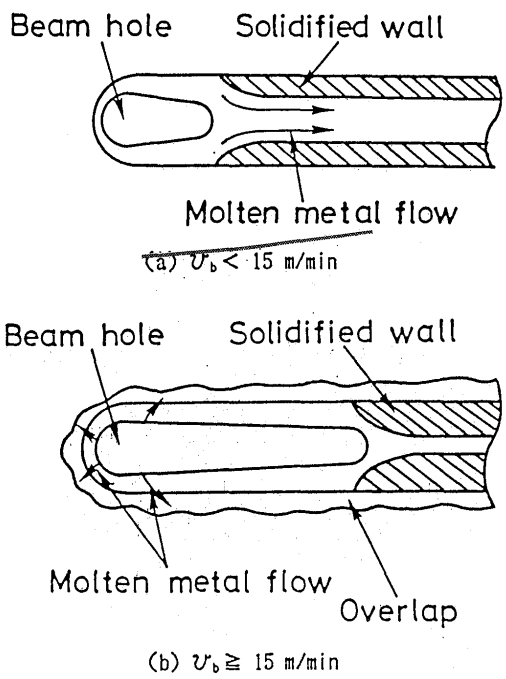


**Fig. 8** Overlap phenomenon.

## 4. Suppression of defects by TEB welding

TEB welding method was applied to suppress defects at welding speed of 15 m/min. Beam configuration of two beams is shown in **Fig. 9**. $I_{b1}$ was 120 mA and $a_b$ value was 1.0. The second electron beam had elliptical oscillation pattern with Tandem Gap $L_b$. **Figure 10** shows Tandem Gap dependence on surface and uranami bead height and width. At the proper Tandem Gap, sound bead without spattering was obtained. Surface bead height was increasing with decreasing Tandem Gap, while uranami bead height was decreasing with $L_b$. There were no effect on bead width. **Figure 11** shows $d_x$ (amplitiude along the welding direction) dependence on bead height and width. At an amplitude of 0.8 mm, sound bead was obtained. However, both side of this value, spattering and underfill occurred. **Figure 12** shows $d_y$ (amplitiude perpendicular to the welding direction) dependence on bead shape. At an amplitude of 0.2 mm, sound bead was obtained. **Figure 13** shows sound bead obtained by TEB welding at 15 m/min with comparison of a typical bead of SEB welding. Welding conditions were $V_{b1}$ = 70kV, $I_{b1}$ =

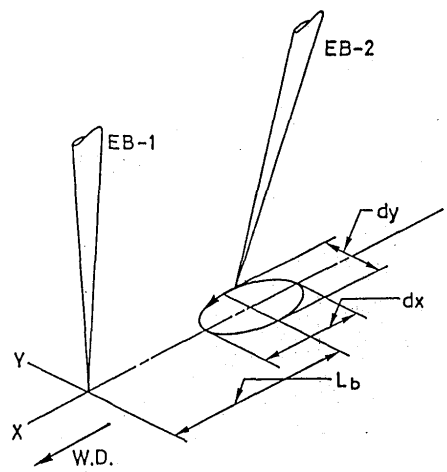


**Fig. 9** Tandem Electron Beam welding with elliptical oscillation of the second beam.

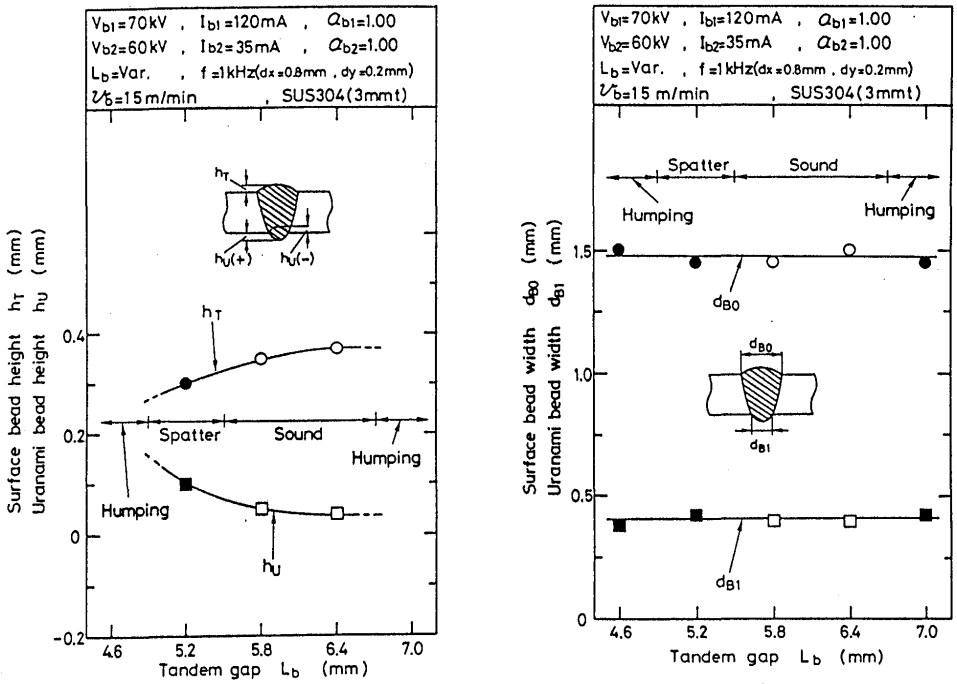


(a) (b)

**Fig. 10** Effet of Tandem Gap on bead shap. (a) Effect on bead height, (b) Effect on bead Width

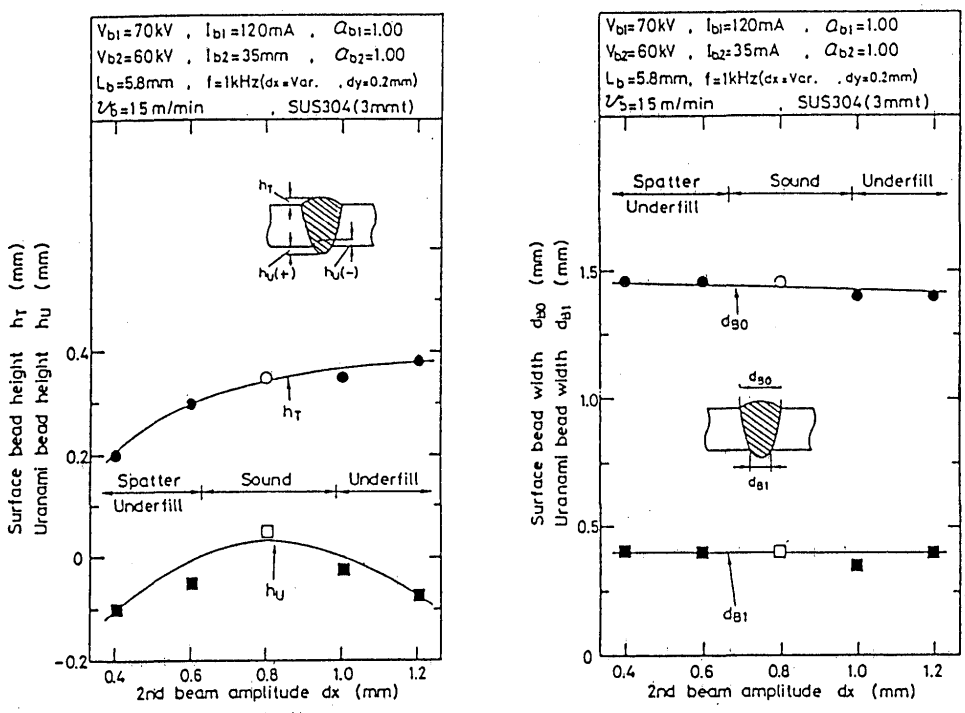


(a) (b)

**Fig. 11** Effect of the second beam amplitude $d_x$ on bead shape. (a) Effect on bead height, (b) Effect on bead Wdth

120 mA, $a_{b1}=1.0$, $V_{b2}=60$kV, $I_{b2}=35$ mA, $a_{b2}=1.0$, $L_b=5.8$mm, f = 1kHz ($d_x=0.8$ mm, $d_y=0.2$ mm), $v_b=15$ m/min. At the welding speed of 15m/min, sound bead was obtiained without undercut, underfill, humping, overlap and spattering. In this case, required power of TEB and SEB welding was nearly the same;

$$\frac{W_{TEB}}{W_{SEB}}=\frac{70\ \text{kV}\times 120\ \text{mA}+60\ \text{kV}\times 35\text{mA}}{70\ \text{kV}\times 140\ \text{mA}}\fallingdotseq 1.0$$

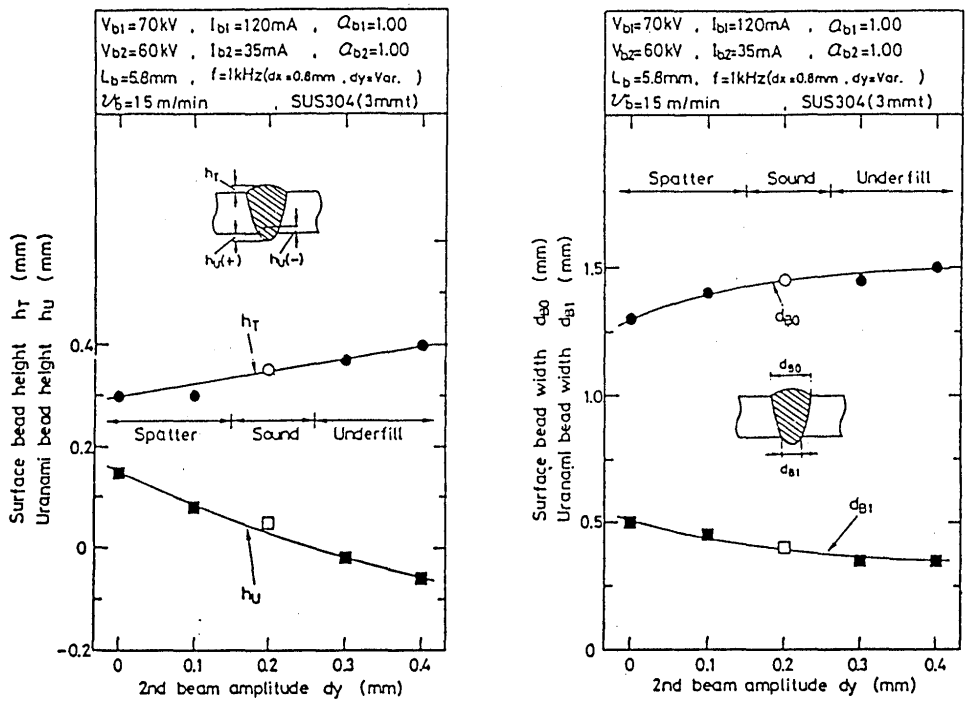


(a) (b)

**Fig. 11** Effect of the second beam amplitude $d_x$ on bead shape. (a) Effect on bead height, (b) Effect on bead Wdth

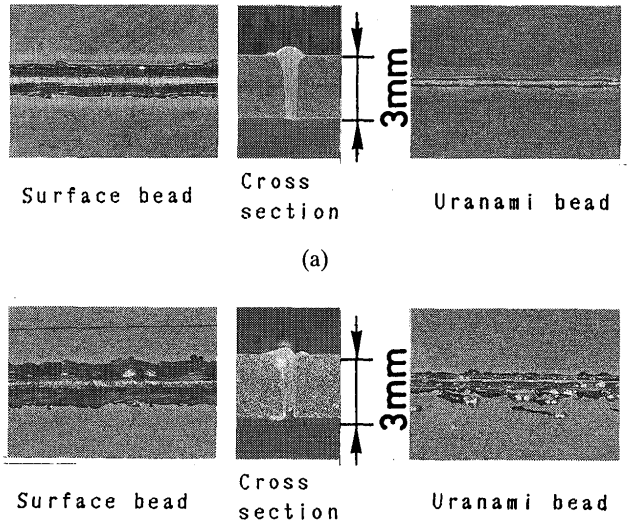


**Fig. 13** Bead appearance and cross section of Tandem Electron Beam welding (a) and single electron beam welding (b) at the welding speed of 15 m/min.

This means that TEB welding of nearly the same power of SEB welding of thrshold current for full penetration can suppress all defects at 15m/min.

## 5. Conclusion

High speed electron beam welding characteristics up to 15 m/min was investigated for 3 mmt stainless steel. With increasing welding speed, sound bead, undercut bead, underfill bead, humping bead and overlap bead were observed in order. Undercut, underfill and humping were suppressed by normal TEB welding without second beam oscillation. Overlap phenomenon was investigated by dynamic observation with high speed movie. It was revealed that overlap phenomenon was caused by the increase of beam hole length and molten pool length which was caused high welding speed. TEB welding with elliptical oscillation of the second beam suppressed overlap phenomenon at 15 m/min. Sound bead without spattering was obtained. TEB welding characteristics were also investigated on Tandem Gap and oscillation amplitudes. It was found that oscillation amplitude of the second beam is very important for high speed welding.

**Acknowledgement**

The authors would like to thank Mr. K. Hori, formerly graduate student of Osaka University, for his cooperation in the experiment.

**References**

1) A. Ihochi and T. Maruyama: "Features of Arc Welding of Thin Plates with Various Welding Processes", J. Japan Welding Society, Vol. 57 (1988), No. 3, 164-170 (in Japanese).
2) Y. Arata and E. Nabegata: "Tandem Electron Beam Welding (Report I)", Trans. of JWRI, Vol. 7 (1978), No. 2, 101-109.