OUKA
Osaka University Knowledge Archive

Title	Studies on Configuration and Control of Low Frequency AC Transmission System Using Cycloconverters
Author(s)	Pichetjamroen, Achara
Citation	大阪大学, 2017, 博士論文
Version Type	VoR
URL	https://doi.org/10.18910/61776
rights	
Note	

Osaka University Knowledge Archive : OUKA

https://ir.library.osaka-u.ac.jp/

Osaka University

Doctoral Dissertation

Studies on Configuration and Control of Low Frequency AC Transmission System using Cycloconverters

Pichetjamroen Achara

September 2016

Graduate School of Engineering,

Osaka University

Preface

This dissertation focuses on the configuration and control scheme of low frequency ac transmission system (LFAC), which expected as an alternative transmission system on line commutated converter multi-terminal application. This study introduces three configurations of LFAC transmission system; single-phase, two-phase and three-phase on low frequency side by using cycloconverters as the frequency converters. The objective of these studies is to find the most suitable configuration and operation such as number of operating phase configurations, transmitting frequency and control schemes. The discussion and comparison of characteristics and behavior of the three configurations of LFAC operating under the same control scheme and conditions to identify the most promising operation system for LFAC. Three configurations of LFACs are described and all three configurations are applied by the control scheme with the aid of PSCAD/EMTDC program to consider the behavior of each LFAC system on line frequency or grid side frequency and low frequency sides. Furthermore, current rating on thyristor devices and number of devices used in each type of LFAC are compared. These results can lead to determine the most suitable transmission system for the LFAC system operation. A new power control scheme by using Virtual Synchronous Generator (VSG) for a multi-terminal LFAC operated with a twelve-pulse thyristor converter was studied in this dissertation. This power control scheme can control and synchronize the amount of transmitting power among each terminal following power references. Control scheme and parameters of the application are addressed. This dissertation is organized into five chapters as follows.

Chapter 1 gives the general introduction of LFAC transmission system and merits of LFAC.

Chapter 2 introduces configuration and comparison on each type of LFAC. The comparison on rating of valves and transmission line are compared to determine the suitable configuration and operation system.

Chapter 3 describes the transmission line model under low frequency and cable model parameters for proposed LFAC transmission system. The analysis on transmission frequency with voltage and cable length and the analysis on transmission frequency with system responding time are performed.

Chapter 4 introduces a power control scheme for multi-terminal LFAC application. In order to frequency synchronization among terminals, virtual synchronous generator (VSG) control is proposed in this chapter.

Finally, chapter 5 summarizes overall important results obtained in this dissertation.

Contents

Acknowledgements 1

1. Introduction 2

1.1 Overview of LFAC transmission system 2

1.2 Merits of LFAC 3

1.2.1 Multi-terminal application 3

1.2.2 Short circuit current 4

1.2.3 Synchronization 5

1.2.4 Cable capacitance 5

1.3 Review on feasibility of LFAC 6

1.4 Objectives of this study 8

References 9

2. A Study on Configuration of Low Frequency AC Transmission System using Cycloconverters 11

2.1 Introduction 11

2.2 Cycloconverter 12

2.3 LFAC Configurations 13

2.3.1 Single-phase system 13

2.3.2 Two-phase system 14

2.3.3 Three-phase system 15

2.3.4 Simulation results 16
2.4 Ratings of valves and transmission line 18
2.5 Summary 22
References 23
3. Operating Frequency of Low Frequency AC Transmission System 24
3.1 Introduction 24
3.2 Cable type for LFAC 25
3.3 Cable model 26
3.3.1 Transmission line model under low frequency 26
3.3.2 Cable model for LFAC 28
3.4 Analysis on transmission frequency with voltage and cable length 29
3.5 Analysis on transmission frequency with system response 31
3.6 Summary 33
References 33
4. Power Control of Low Frequency AC Transmission System 35
4.1 Introduction 35
4.2 Control strategies for LFAC for two terminal system 36
4.2.1 Mode operation of cycloconverter 37
4.2.2 The proposed voltage control scheme 40
4.2.3 Proposed frameworks for current limiter and extinction angle control 42
4.3 Control strategies for multi-terminal LFAC 44
4.3.1 Virtual Synchronous Generator (VSG) Control 44
4.3.2 VSG control on LFAC 45
4.4 Simulation results 50
4.4.1 Two-terminal LFAC response 51

4.4.2 Current limiter and extinction angle control 52

4.4.3 *J* and *D* parameters tuning 54

4.4.4 Power reversal and system disturbance 56

4.4.5 Multi-terminal LFAC response 58

4.5 Summary 62

References 62

5. Conclusions 64

List of Publications 66

Acknowledgements

This research has been carried out during the author's tenure of doctoral course at the Graduate School of Engineering, Osaka University, under the guidance of Professor **Toshifumi Ise** at the Division of Electrical, Electronics and Information Engineering, Graduate School of Engineering, Osaka University, Japan.

First of all, I would like to express my deep and sincere gratitude to my supervisor, Professor **Toshifumi Ise** for his guidance, motivation, valuable discussions and generous commitment. Throughout my doctoral work, he encouraged me to develop analytical thinking and research skills.

I would like to express my sincere appreciation to Associate Professor **Yushi Miura**. Thanks for his all valuable discussions and suggestions throughout this research work.

I would like to express my appreciation to Professor **Tsuyoshi Funaki** of the Division of Electrical, Electronics and Information Engineering, Graduate School of Engineering, Osaka University for his generous comments in the presentation for Ph.D dissertation and reviewing this thesis.

May I also take this opportunity to express my sincere gratitude to the other members of my dissertation committee: Professor **Shigemasa Takai** and Professor **Hiroyuki Shiraga** in the Graduate School of Engineering, Osaka University.

I would like to express my sincere thanks to Professor **Hassan Bevrani** in the Department of Electrical and Computer Engineering, University of Kurdistan, Iran for his constructive advices during writing journal papers.

I would like to express my sincere thanks to all my friends, especially friends in the laboratory for their warm helps in research and living.

I am thankful to the Royal Thai Government Scholarship for supporting the scholarship during my study in Japan.

Lastly, but most importantly, I am heartily thankful to everyone in my family for their supporting and giving me encouragement to continue the research.

Chapter 1

Introduction

In this section, a general introduction about the low frequency ac tranmsission system (LFAC) by using cycloconverters is expressed. The merits and past achievements in the literature concerning about this transmission system are briefly reviewed. Finally, the main objectives of this dissertation are outlined.

1.1 Overview of LFAC Transmission System

High Voltage Direct Current Transmission (HVDC) is broadly applied for point to point of two power systems, since HVDC cable transmission is not affected from the capacitance in the transmission line, the HVDC systems are feasible for long lengths of transmission line. However, increasing of interconnection using HVDC off-shore wind turbine, multi-terminal HVDC (MTDC) is paid attention. Currently two basic converter technologies, conventional Line-Commutated Current Source Converters (LCC) and self-commutated Voltage Source Converters (VSCs) including Modular Multi-level Converter (MMC), are mostly used in the HVDC systems.

Line-commutated converter based HVDC (LCC-HVDC) still remains the dominant technology for long distance bulk power transmission due to lower investment costs and high maximum power transfer capacities. It naturally is able to withstand short circuit currents due to dc inductors limiting the current during fault conditions. Power reversal, however, in MTDC usually needs a complicated switching technique in the case of using LCCs [1].

On the other hand, VSC-HVDC system is sensitive to faults on the dc lines. When a fault occurs on the dc side of a VSC-HVDC system, the IGBT cannot control and freewheeling diodes work as a bridge rectifier. It is not able to withstand large surge currents, and may be damaged before the fault is cleared. Some solutions are proposed,

however additional control and switching devices are needed.

Besides LCC-HVDC and VSC-HVDC, high-voltage low-frequency ac transmission system (LFAC) has been proposed as a promising transmission system that can be compromised advantages and disadvantages of both two transmission systems. The LFAC transmission system can reduce capacitive current, and offer easiness for over-current protection.

In general, the main advantage of the LFAC technology is to significantly reduce power losses due to decreasing of transmitting frequency. The increase of power capacity and transmission distance compared to the conventional (50 or 60 Hz) transmission ac system can be mentioned as the main advantages [2]. Protection of low frequency side fault is easier than the dc side fault of VSC-HVDC due to zero crossing point; also power flow direction can be changed by the phase control of voltage on low frequency side [3], and existing circuit breaker can apply in this system although interruption current is decreased around half of 60 Hz [4] at 10 Hz.

LFAC transmission has been studied on the application of wind power due to the increasing of interconnection between new wind power installations and the grid[5-6]. The capability of handling large amounts of power as more generation is injected as multi-terminal system is a feature of the system.

1.2 Merits of LFAC

The merits of the LFAC system are explained in the following subsections.

1.2.1 Multi-terminal application

In the case of line-commutated converter based multi-terminal HVDC (LCC-MTDC) as shown in Figure 1.1, the LCC-HVDC configuration using a current source converter has the obvious problem to operate in this system. Mechanical switches are necessary to change voltage polarity to reverse the power flow directions in terminal C.

The VSC-HVDC transmission system as shown in Figure 1.2 can change the direction of its power flow without reversing the polarity of the voltage of dc cables, which is suitable for multi-terminal system.

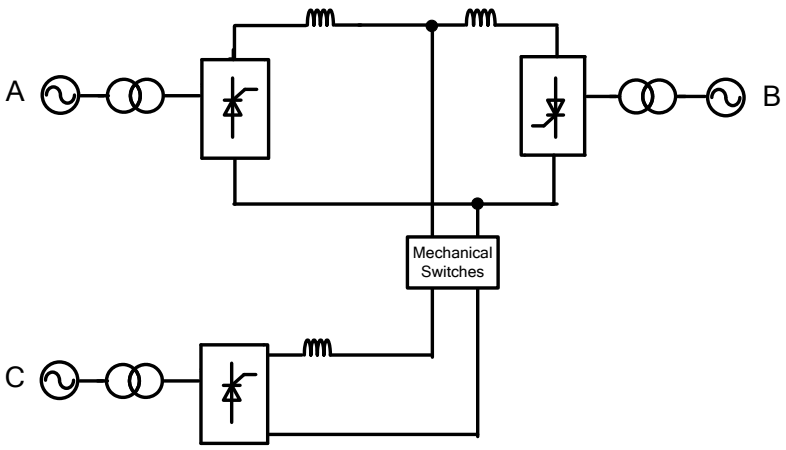

Figure 1.1 Configuration of LCC-MTDC

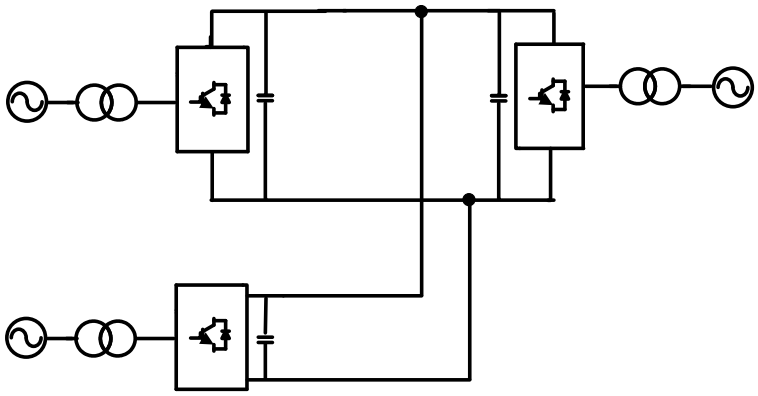

Figure 1.2 Configuration of VSC-MTDC

Besides two types of multi-terminal HVDC, line-commutated converter based multi-terminal LFAC (LCC-MTLF) as shown in Figure 1.3 is alternatives for transmission system. It can solve these problems by designing the controller that can be synchronized the firing angle of thyristors in each terminal following the amount of transmitting power reference and directions.

1.2.2 Short circuit current

In the case of LFAC transmission system shown in Figure 1.3, operating by LCC converter has the natural ability to withstand short circuits as the inductors can assist the limiting of the currents during fault operating conditions. Moreover, when a fault occurs on a low frequency line, it does not need to shut down all the system due to existence of

inductance on low frequency lines so that the LFAC transmission system can continue operation partially by disconnecting the faulted line.

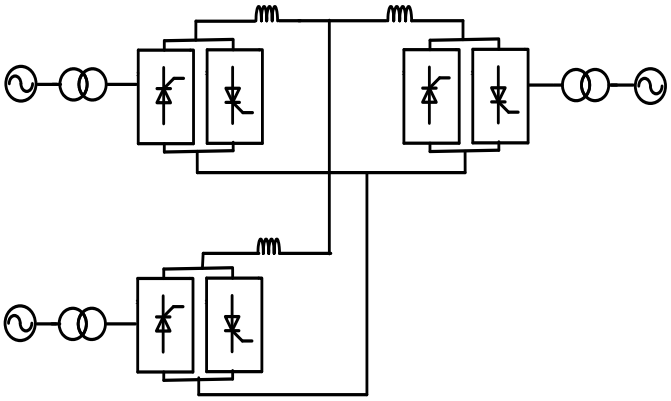

Figure 1.3 Configuration of LCC-MTLF

1.2.3 Synchronization

When the number of VSC converter stations increases in an HVDC transmission system, the complexity of the master control increases. The coordinated control for output voltage of each VSC needs the information for proper coordination between terminals to share the amount of transmitting power to each terminal. To set active power sharing, a fast telecommunication link is needed for the synchronization of the converter orders as shown in Figure 1.4.

To avoid this control complexity, LCC-MTLF can be employed by applying the power synchronization control which make each terminal has a dynamic response similar to a synchronous machine which is virtual synchronous control (VSG) [7]. This control method can synchronize power sharing without communication link.

1.2.4 Cable capacitance

HVDC system does not affect to the charging capacitance current in the transmission cable. However, this charging current has significantly affected ac transmission system. To operate with LFAC, the effect from this charging current is reduced because this current is proportional to transmission frequency as shown in (1.1). This charging current (I_c) can cause the heating due to conductor loss, which limits maximum transmission length.

$$I_c = j\omega CV = j2\pi fCV \quad (1.1)$$

where;

I_c : charging current

C : cable capacitance

V : rated voltage

f : frequency

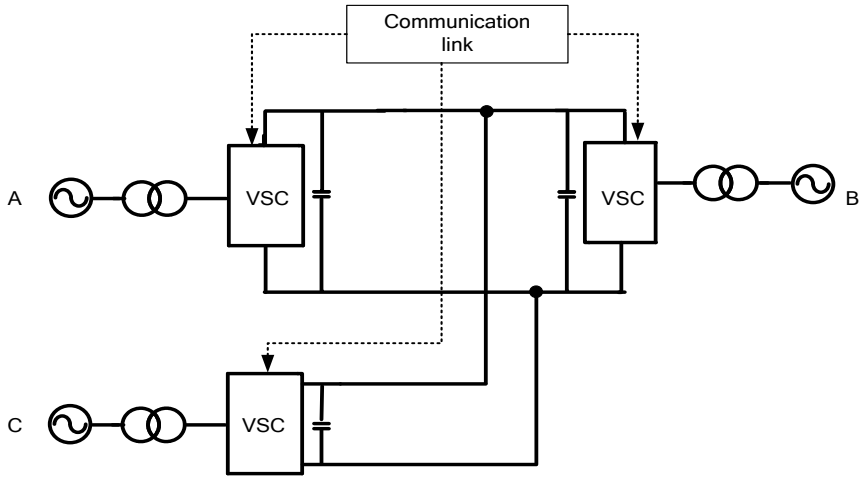

Figure 1.4 Control scheme of the VSC-MTDC

1.3 Review on Feasibility of LFAC

LFAC transmission has been studied on the application of wind power due to the increasing of interconnection between new wind power installations and the grid [5,6]. The capability of handling large amounts of power as more generation is injected as multi-terminal system is one of features of the system. LFAC is an interesting alternative transmission option for offshore wind primarily due to the extension of AC power transmission distance at lower frequency and the elimination of the need for an offshore converter station when compared to VSC-HVDC transmission. The elimination of the offshore converter station is based on the assumption that the wind turbines have the ability to produce AC power at a lower frequency [8]. The LFAC transmission line transmits power at low frequency to the shore where a frequency converter converts from low frequency to the grid frequency. This technology reduces the complexity offshore and

therefore may reduce the capital investment costs, and increase reliability, with the impact of decreasing the overall cost of offshore wind.

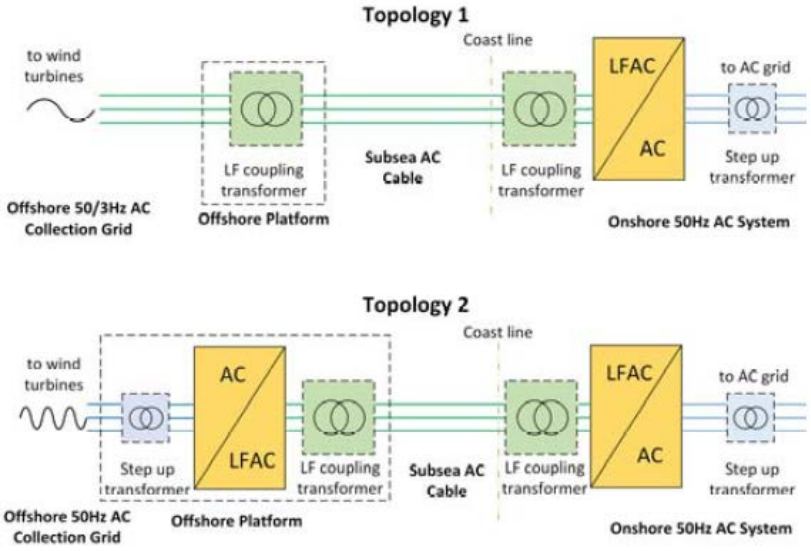

Figure 1.5 Configuration of offshore wind turbine with LFAC system

Two topologies of offshore LFAC is shown in Figure 1.5 [10]. For topology 1, the converter station is located onshore, which reduces the control complexity and the difficulty of maintenance. However, the generator is large and heavy. For topology 2, another frequency converter is installed on the offshore platform, thus the transmitting frequency on low frequency side can be operated at the different values including all the interconnected wind farms.

In 2009, Qin [9] proposed LFAC with topology 1 configuration in Figure 1.5 as a solution for offshore wind interconnection, which is the most feasible application of LFAC transmission. It is an interesting alternative to HVDC for the interconnection of offshore wind due to the absence of the offshore converter, and the extension of the maximum transmission length for AC cables [5].

The application of LFAC with XLPE cable is feasibility to consideration [2]. With the reduction in cable size, the enlargement of the transmitting power capacity and the extension of the transmission length of a power cable, these are the keys to use XLPE as a cable in the transmission system. For HVDC transmission system, Oil Filled (OF) cable may be applicable to this system; however the maintenance issues still needs to be considered. XLPE cable is one of the solutions for this problem; however this system has a difficulty in operating with XLPE cable by the space charge accumulation in the insulator.

The accumulated space charge may malfunction to the uniformity of the electrical field in the insulator dielectrics and induces a breakdown. By using LFAC transmission system with XLPE power cable is feasible for the long distance transmission.

1.4 The Objectives of This Study

One of the objectives of this research is to show a control scheme for the multi-terminal LFAC application shown in Figure 1.6. To synchronize each terminal with proper phase difference, the power control scheme with Virtual Synchronous Generator Control is proposed for LFAC system. The function of this proposed control method shown in Figure 1.7.

Another objective is to investigate the various types of LFAC system configuration that could be operated in the system to find the most suitable and efficient operation for this system. Three configurations such as single-phase, two-phase, three-phase of LFAC systems are studied by considering rating of valves and transmission line, operating frequency and system responding time and also comparing with HVDC transmission system.

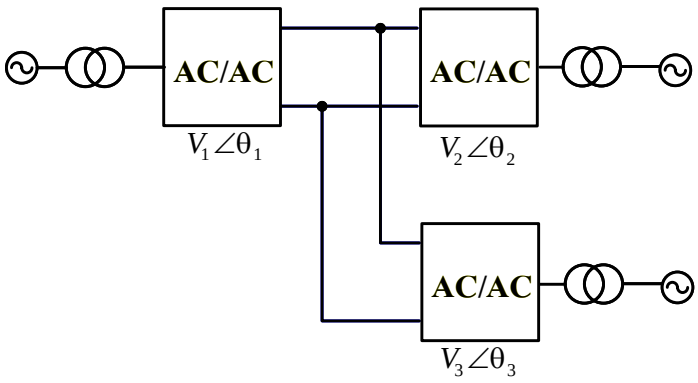

Figure 1.6 Configuration of multi-terminal LFAC

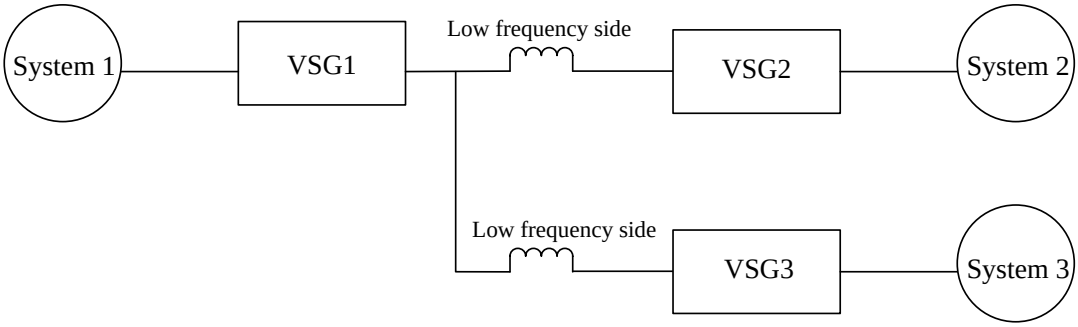

Figure 1.7 Concept of power control scheme with Virtual Synchronous Generator

The works that serve the objective are listed as below.

(1) Three configurations of LFAC system are proposed.

(2) Ratings of valves and transmission line in each configuration are considered.

(3) Characteristics of transmission distance, transmission power and system responding time to transmission frequency are investigated.

(4) Novel power control system for multi-terminal LFAC using virtual synchronous generator control is studied.

(5) Overall control scheme of LFAC is investigated.

(6) Simulations are carried out by PSCAD/EMTDC to validate the proposed system configurations and control systems.

References

[1] V. Lescale, A. Kumar, L. E. Juhlin, H. Bjorklund, and K. Nyberg, “Challenges with multi-terminal UHVDC transmissions”, Power System Technology and IEEE Power India Conference, New Delhi, India, pp. 375-381 (12-15 October, 2008).

[2] T. Funaki and K. Matsuura, “Feasibility of the low frequency AC transmission”, Proceeding of the Power Engineering Society, Winter Meeting, Singapore, pp.2693-2698 (23-27 January, 2000).

[3] P. Achara and T. Ise, “Power control of low frequency AC transmission system using cycloconverters with virtual synchronous generator control”, Industrial Electronics Society Conference, Yokohama, Japan, pp.2661-2666 (9-12 November, 2015).

[4] P. G. Slade and R. K. Smith, “A comparison of the short circuit interruption performance using transverse magnetic field contacts and axial magnetic field contacts in low frequency circuits with long arcing times”, Proceeding of Discharges and Electrical Insulation in Vacuum International Symposium, Yalta, Crimea, pp. 337-340 (27 September-1 October, 2004).

[5] C. Hao, M. H. Johnson, and D. C. Aliprantis, “Low-Frequency AC transmission for offshore wind power”, IEEE Transactions on Power Delivery, Vol. 28, No.4, pp.2236-2244 (October, 2013).

[6] C. Mau, K. Rudion, A. Orths, P. B. Eriksen, H. Abildgaard, and Z. Styczynski, “Grid connection of offshore wind farm based DFIG with low frequency AC transmission system”, Proceeding of Power and Energy Society General Meeting, San Diego, CA., USA, pp.1-7 (22-26 July, 2012).

[7] H. Bevrani, T. Ise, and Y. Miura, “Virtual synchronous generators: A survey and new perspectives”, International Journal of Electrical Power and Energy Systems, Vol. 54, pp.244-254 (January, 2014).

[8] W. Fischer, R. Braun, and I. Erlich, “Low frequency high voltage offshore grid for transmission of renewable power”, Proceeding of Innovative Smart Grid Technologies, Berlin, Germany, pp.1-6 (14-17 October, 2012).

[9] N. Qin,S. You, Z. Xu, and V. Akhmatov, “Offshore wind farm connection with low frequency AC transmission technology”, Proceeding of the IEEE power energy society general meeting, Alberta, Canada, pp.1-8 (26-30 July, 2009).

[10] Y. Tang, P. B. Wyllie, J. Yu, X. M. Wang, L. Ran, and O. Alatise, “Offshore low frequency AC transmission with back-to-back modular multilevel converter (MMC)”, Proceeding of AC and DC Power Transmission (IET), Birmingham, UK, pp.1-8 (10-12 February, 2015).

Chapter 2

Configuration of Low Frequency AC Transmission System using Cycloconverters

2.1 Introduction

A number of technical challenges need to be overcome before the implementation of LFAC, low frequency ac transmission system, can be realised. The components need to be carefully considered to make up the LFAC transmission system. A number of different converter types such as cycloconverter, matrix converter and Back to Back Voltage Source Converter (BTB VSC) can be applied to this system. LFAC has been recently proposed [1-3] by using cycloconverter to convert the grid frequency to lower one. Even the operating frequency is lower, but it still is an ac system. So that the existing technologies and available power system components such as transmission line design and protection systems that are used in 60 Hz conventional transmission system can be applied to LFAC system. In frequency conversion part of LFAC, cycloconverter is suitable at high voltage level [4]. The experiment on fractional frequency transmission system has been performed by using cycloconverter as a frequency converter only on receiving end side to step up frequency from 50/3 Hz to utility grid frequency [5].

This chapter describes the low frequency ac transmission system in more details and various types of system configurations. The configurations of three types of low frequency ac transmission system by using 12-pulse cycloconverters and different number of operating phase will be shown and explained. Ratings of valves and transmission line are investigated and compared to determine the suitable configuration for LFAC operation.

2.2 Cycloconverter

A cycloconverter is a thyristor based device which uses direct AC-AC conversion to change frequency. The operation of the cycloconverter is to convert an alternating input voltage of one frequency to an alternating output voltage of another frequency. It is essential feature is that it contains only one stage of power conversion. Due to the use of thyristors, with their relatively low losses, the cycloconverter is capable of high power conversion efficiency.

The cycloconverter is simply a dual-converter, which is controlled, through a time-varying phase modulation of its firing pulses, so that it produces an alternating output voltage. By appropriate control, it is possible to produce a continuous variation of both the amplitude and frequency of the output voltage. For LFAC transmission system, the cycloconverter has often been chosen as one of the main options for the frequency changing component. In the proposed LFAC configuration, a thyristor based twelve-pulse cycloconverter as shown in Figure 2.1 is used. The thyristor firing angle in each converter is controlled based on a reference input signal at the desired output frequency. LFAC with cycloconverters appears to be feasible to high power transmission with increased reliability and lower cost compared to VSC-HVDC systems [7]. In this research, each terminal side consists of two twelve-pulse cycloconverter, which are connected to the same ac grid via three phase transformers.

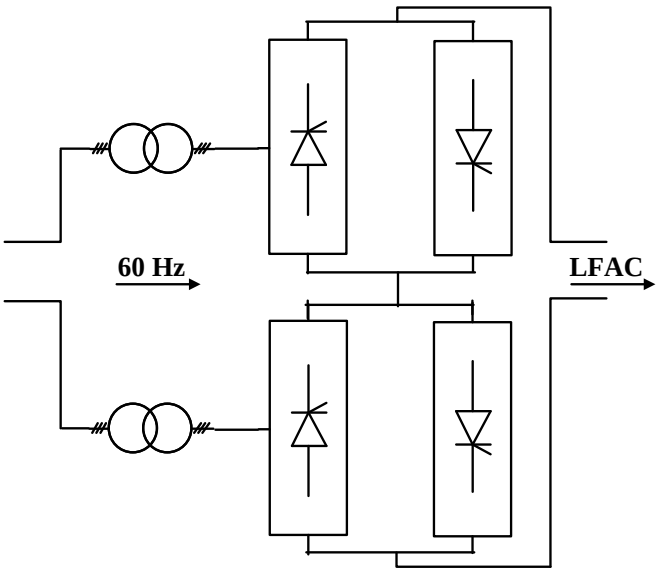

Figure 2.1 twelve-pulse cycloconverter

2.3 LFAC Configurations

2.3.1 Single-Phase system

Figure 2.2 shows the single-phase configuration of low frequency ac transmission system. Each side consists of three phase (Y-Δ) and (Y-Y) transformers, and two sets of 12-pulse ac-ac converter are connected to the power cable. At sending end, the cycloconverter works as frequency converter changing from utility ac input voltage from 60 Hz to low frequency. At receiving end, another cycloconverters works as frequency converter changing low frequency to 60 Hz of ac voltage. By operating LFAC with single-phase system, the power fluctuation problem occurs on the line frequency side, because the in-phase operation on single-phase cannot avoid this problem as shown in Figure 2.3.

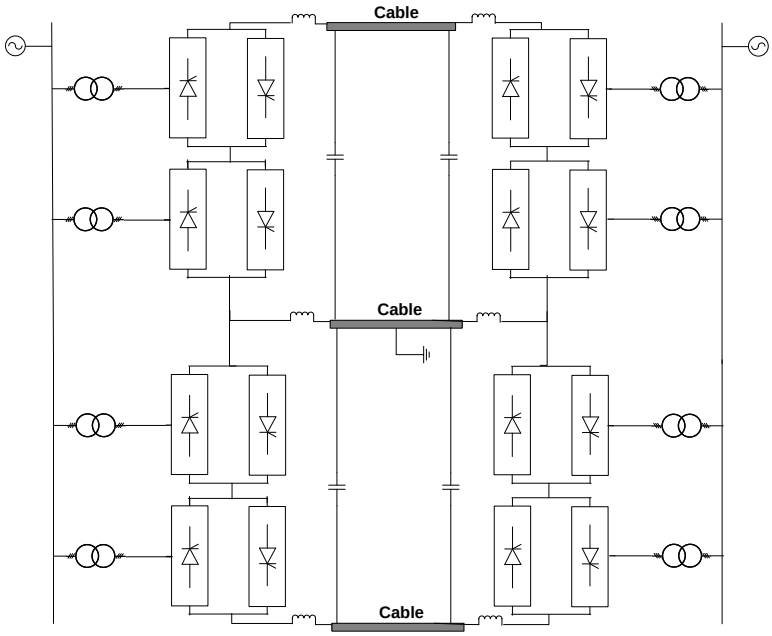

Figure 2.2 Single-phase LFAC transmission system

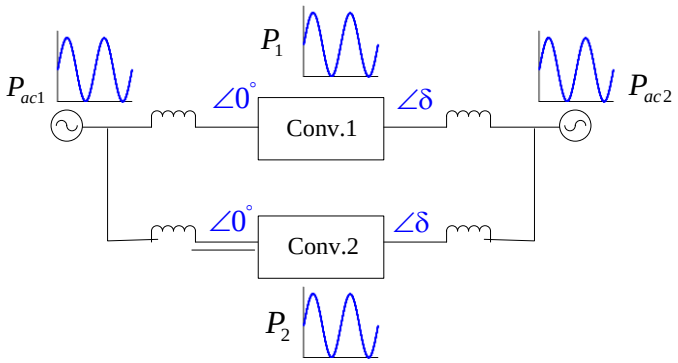

Figure 2.3 Power fluctuation of single-phase LFAC

2.3.2 Two-phase system

Similar to the proposed circuit configuration of the single-phase system, the same configuration can be also used for two-phase system with 90° phase differences between each phase. Figure 2.4 shows the two-phase system operation for low frequency ac transmission system. There are two sets of single-phase system with 12-pulse cycloconverters, the upper part called α-phase and the lower part called β-phase, with same rating and topology, the total amount of transmitting power can be equally shared in each phase. This configuration can keep constant power on line frequency side, which is one of the merits of this configuration.

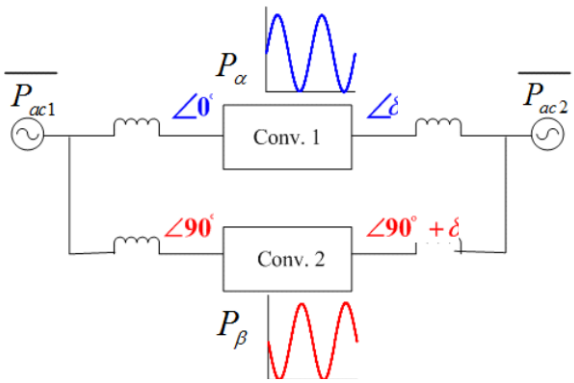

Figure 2.4 Power fluctuation of two-phase LFAC

Power fluctuation analysis can be done using Figure 2.4. The power equation from the low frequency side can be stated as follows:

$$
\begin{aligned}
P_{\alpha} &= (V_{LF}\sin\theta)(I_{LF}\sin\theta) \\
P_{\beta} &= \left(V_{LF}\sin\left(\theta-\frac{\pi}{2}\right)\right)\left(I_{LF}\sin\left(\theta-\frac{\pi}{2}\right)\right) \\
P_{ac} &= P_{\alpha}+P_{\beta} \\
&= (V_{LF}\sin\theta)(I_{LF}\sin\theta)+ \\
&\quad \left(V_{LF}\sin\left(\theta-\frac{\pi}{2}\right)\right)\left(I_{LF}\sin\left(\theta-\frac{\pi}{2}\right)\right) \quad ;\theta=\omega_{LF}t \\
&= V_{LF}I_{LF}
\end{aligned}
\tag{2.1}
$$

where; V_{LF} is the voltage on low frequency side
I_{LF} is the current on low frequency side
ω_{LF} is the angular frequency on low frequency side

The calculated fluctuation power on line frequency side P_{ac} from equation (2.1) shows that power fluctuation is eliminated and power is kept at constant.

2.3.3 Three-phase system

Figure 2.5 shows a three-phase low frequency ac transmission system configuration. This system has a similar configuration with the previous two-phase transmission system. In this configuration one more phase is added comparing with the two-phase configuration. This three-phase system configuration can be described as phase a, phase b and phase c. Each phase has 120° phase difference among them. The advantage on this configuration is to keep instantaneous power constant on the line frequency side as the same as the two-phase system.

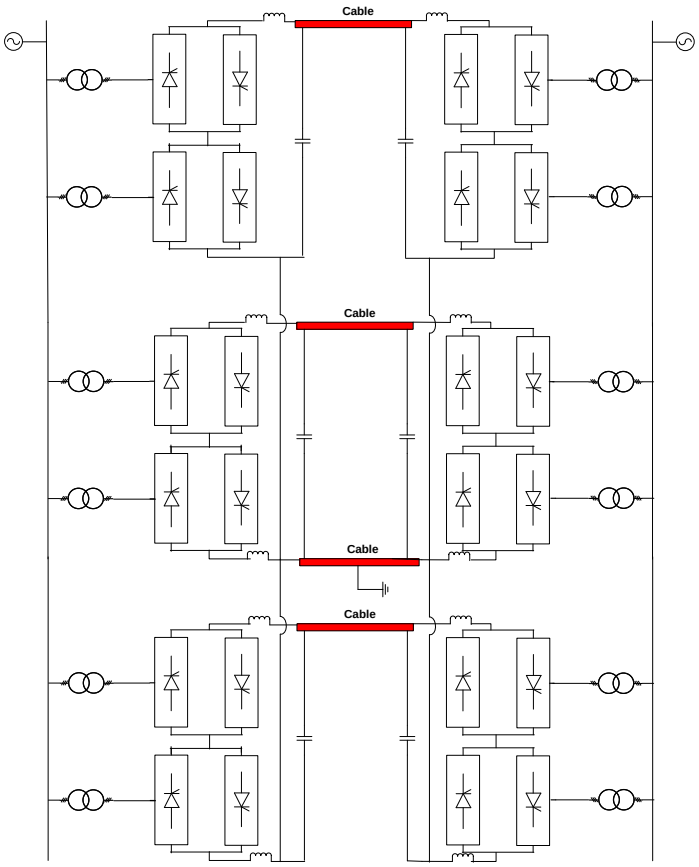

Figure 2.5 Configuration of three-phase LFAC

2.3.4 Simulation results

In this simulation case, single-phase, two-phase and three-phase configurations are applied to transfer the same amount of power. The power on line frequency side results of comparison study of each phase system configurations are shown in Figure 2.6

The merit for choosing two-phase or three-phase system is no power fluctuation on line frequency side. Figure 2.6(a) shows the results on line frequency side of single-phase system with the power fluctuation problem on active (P_{ac1}) and reactive power (Q_{ac1}). However, under the two-phase system operation, the results on line frequency side show no fluctuation on active (P_{ac2}) and reactive power (Q_{ac2}) as shown in Figure 2.6(b) and Figure 2.6(c), respectively.

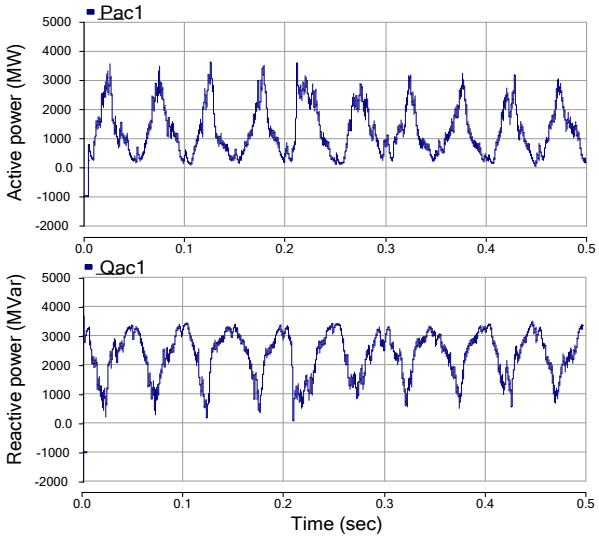

(a)

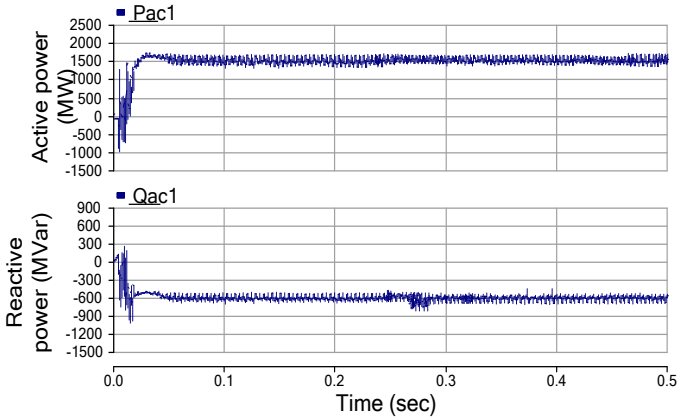

(b)

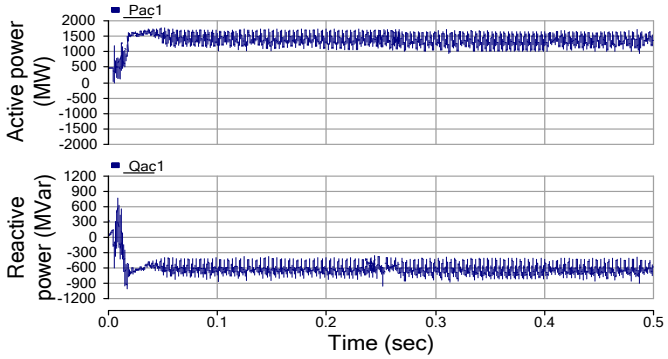

(c)

Figure 2.6 Line frequency side simulation results; a) Single-phase system, b) Two-phase system, c) Three-phase system

2.4 Ratings of Valves and Transmission Line

Under the same condition in rated transmitting power and transmission distance (500 km), the comparison results are shown in Table 2.1 and Table 2.2. Table 2.1 shows the results of valve peak voltage, the number of valves per station, valve peak current and average current of LCC-HVDC and three types of LFAC by using valve voltage and dc current of LCC-HVDC system as a based voltage and current. Table 2.2 shows the results of comparison of transmission line and neutral line currents. The comparison results are obtained by the calculation from (2.2) for the HVDC and (2.3) for the LFAC system with the assumption of the same transmitting power for all cases. Figure 2.7 illustrates the overall configuration used for this evaluation. The output waveform of thyristor current, as shown in Figures 2.8 (a) and (b), can confirm the calculation results.

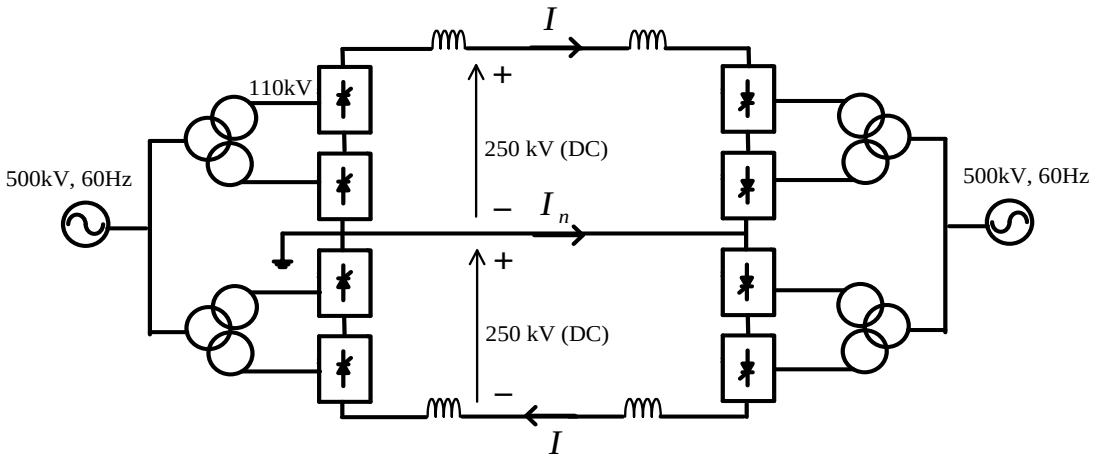

(a)

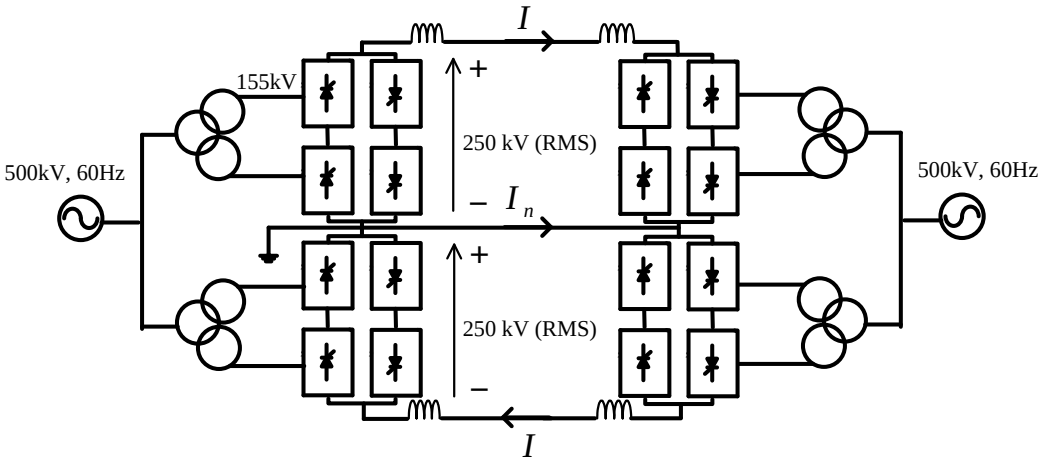

(b)

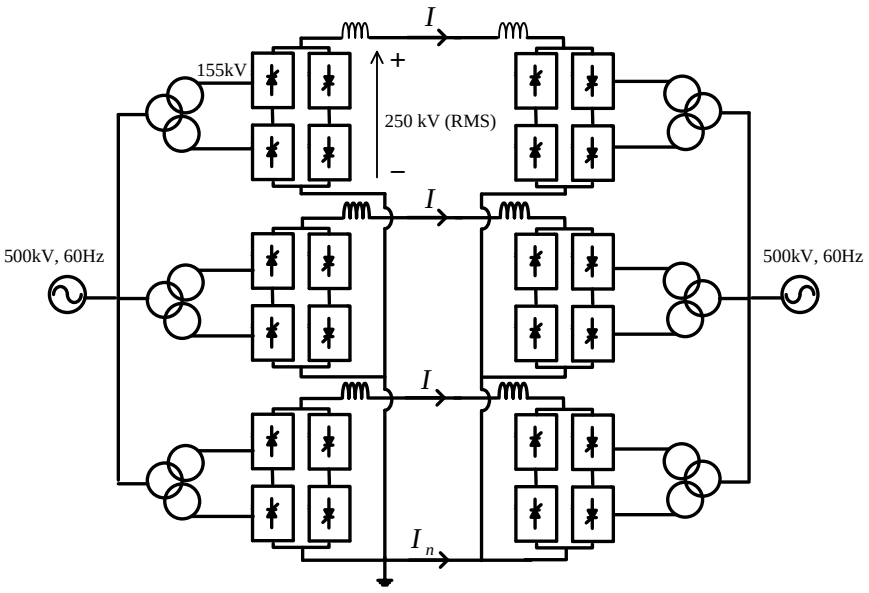

(c)

Figure 2.7 Configurations for valve and transmission line rating current; a) HVDC, b) Single-phase and two-phase, c) Three-phase

Calculation formulae for HVDC are as follows:

$$I_{peak} = I_{dc} = I_{rms}$$

$$I_{avg} = \frac{I_{dc}}{3} \tag{2.2}$$

$$I_n = 0$$

where;

I_{peak}: Valve peak current
I_{dc} : Current on dc side
I_{rms} : Root mean square (RMS) current on dc side
I_{avg} : Average current on valve
I_n : Neutral current

The peak and average currents for LFAC system are given by

$$I_{peak} = \sqrt{2} I_{rms}$$

$$I_{avg} = \frac{1}{2\pi} \int_0^{\pi} \sqrt{2}\, I_{rms} \sin\theta \, d\theta \tag{2.3}$$

$$= \frac{\sqrt{2}}{\pi} I_{rms}$$

where;

I_{peak}: Valve peak current
I_{rms} : RMS current on low frequency side
I_{avg} : Average current on low frequency side

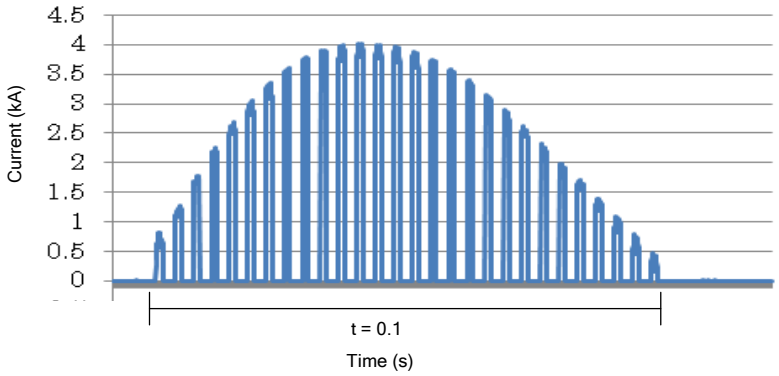

(a)

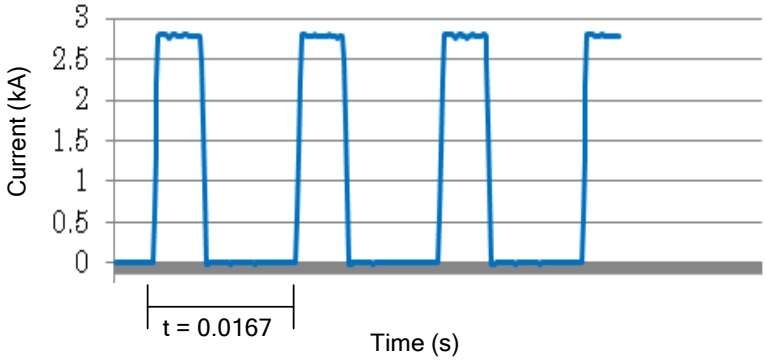

(b)

Figure 2.8 Thyristor current of LFAC and HVDC system; a) LFAC, and b) HVDC

Table 2.1 Comparison of valve rating

	LCC-HVDC	**LFAC**		
		Single-phase	**Two-phase**	**Three-phase**
Valve peak voltage	1 pu	1 pu	1 pu	1 pu
Valves/station	24	48	48	72
Valve peak current (I_{peak})	1 pu	$\sqrt{2}$ pu	$\sqrt{2}$ pu	$\frac{2}{3}\sqrt{2}$ pu (=0.94)
Valve average current (I_{avg})	$\frac{1}{3}$ pu	$\frac{\sqrt{2}}{\pi}\times\frac{1}{3}$ pu (=0.15)	$\frac{\sqrt{2}}{\pi}\times\frac{1}{3}$ pu (=0.15)	$\frac{\sqrt{2}}{\pi}\times\frac{2}{3}\times\frac{1}{3}$pu (=0.1)

Table 2.2 Comparison of transmission line rating

	LCC-HVDC	**LFAC**		
		Single-phase	**Two-phase**	**Three-phase**
Current of transmission line in RMS (I_{rms})	1 pu x 2 lines	1 pu x 2 lines	1 pu x 2 lines	$\frac{2}{3}$ pu $\times$ 3 lines
Neutral line current in RMS (I_n)	0	0	$\sqrt{2}$ pu	0

From the comparison results given in Table 2.1 and Table 2.2, it can be seen that the LFAC and LCC-HVDC have the same peak value of valve voltage. Three-phase type of LFAC has the lowest value of average current, thus leading to low power losses during operation. This configuration also has the lowest RMS current of transmission lines, which affects the size and cost of transmission line in the system. However numbers of valve devices are the largest among others system, that negatively affects the size and cost of the frequency converter station. In the case of two-phase system, it has the same number of devices as single-phase type, but average current is lower than LCC-HVDC system, number of cable is same as LCC-HVDC and single-phase system, while the neutral line current is large, which is the demerit of this system compared to others. For these reasons, two-phase and three-phase systems should be chosen considering the length of transmission. For longer transmission distance, three-phase system is more suitable, because it has low power losses of transmission line during operation, small size and low cost of transmission line.

2.5 Summary

Three configurations of LFAC are proposed in this section. Single-phase configuration has a problem with power fluctuation on line frequency side. Two-phase and three-phase configurations can solve this problem, which can be confirm by power analysis and simulation results. Then, rating of valves and transmission line in each type of

configurations including HVDC are compared. The comparison results show that two-phase and three-phase systems should be chosen considering the length of transmission. For longer transmission distance, three-phase system is more suitable, because it has low power losses during operation, small size and low cost of transmission line. The studies in this section can lead to decide the appropriate configuration for LFAC operation.

References

[1] Y. Cho, G. J. Cokkinides, and A. P. Meliopoulos, “Time domain simulation of a three-phase cycloconverter for LFAC transmission systems”, IEEE Power Energy Soc. Transmission and Distribution Conference, Orlando, FL, USA, pp.1-8 (May, 2012).

[2] T. Funaki and K. Matsuura, “Feasibility of the low frequency AC transmission”, Proceeding of the Power Engineering Society, Winter Meeting, Singapore, pp.2693-2698 (23-27 January, 2000).

[3] R. Nakagawa, T. Funaki, and K. Matsuura, “Installation and Control of Cycloconverter to Low Frequency AC Power Cable Transmission”, Power Conversion Conference, Osaka, Japan, pp.1417-1422 (2-5 April, 2002).

[4] P. B. Wyllie, Y. Tang, L. Ran, T. Yang, and J. Yu, “Low Frequency AC Transmission - Elements of a Design for Wind Farm Connection”, International Conference on AC and DC Power Transmission (IET), pp.1-5 (February, 2015).

[5] X. Wang, C. Cao, and Z. Zhou, “Experiment on fractional frequency transmission system”, IEEE Transaction on Power System, Vol.21, No.1, pp.372–377 (February, 2006).

[6] P. Achara and T. Ise, “Operating Phase and Frequency Selection of Low Frequency AC Transmission System using Cycloconverters”, IEEE Power Electronics Conference, Hiroshima, Japan, pp.3687-3694 (18-21 May, 2014).

[7] C. Hao, M. H. Johnson, and D. C. Aliprantis, “Low-Frequency AC transmission for offshore wind power”, IEEE Transactions on Power Delivery, Vol. 28, No.4, pp.2236-2244 (October, 2013).

Chapter 3

Operating Frequency of Low Frequency AC Transmission System

3.1 Introduction

LFAC, low frequency ac transmission system is used to extend the range of transmission technology. By reducing the transmitted frequency, the line reactance is reduced and this implies that the charging current is also reduced. The range of transmission distance is thus increased, which makes it competitive with the HVDC[1]. Beside transmission distance, voltage level, power transfer capability, the response of the transmission network for low transmitting frequency are also the important factors to consider choosing the optimal operating point. When a transmission system operates at a low frequency, the consideration of the steady-state and dynamic performance of the LFAC system under various operating frequencies is necessary.

The LFAC system could be built with commercially available power system components. The transformer could be a 60 Hz transformer derated by a factor of fractional frequency, with the same rated current but derated voltage. Also, existing ac circuit breakers can be used with the LFAC system although the interruption current is decreased to around half of 60 Hz as discussed in [2].

This chapter describes the design of cable and filter to apply to the proposed LFAC transmission system. The comparison between frequency with cable length and voltage level, the effect of frequency on system response on low frequency side are also presented here.

3.2 Cable Type for LFAC

In high power capacity and long transmission distance, Cross-Linked Polyethylene (XLPE) cable type is one of suitable power cables due to its insulating dielectric material. However, it is not suitable for HVDC applications because of space charge phenomena in the insulator [7]. Under the influence of a direct voltage, space charges would accumulate at certain places in the insulation wall. These accumulations would create unfavorable peaks of the electric field in the insulation. This phenomenon has make the XLPE cable unsuitable for long time usage in HVDC system.

Oil-filled cable is another available type to operate in the transmission system. During operation, the oil is pressurized. The dielectric strength of paper-oil insulation for ac voltage is depending on the pressure. The solubility of gases in the oil decreases as pressure decrease. If the pressure falls too low, gases dissolved in the oil may be released and form bubbles. The electric field can create partial discharges in the bubbles, which can erode the insulation and cause an electric breakdown [8].

Therefore, monitoring oil-pressure is necessary. The necessary pressure in submarine oil-filled cables is maintained from pressure feeding units on the shore station. The cable must have sufficiently large oil channels to provide hydraulic communication from the land-based feeding units to all parts of the cable. However, this cable type can cause the environment problems by leakage of oil from the system [8].

In gas-filled cable, instead of dielectric oil, pressurized nitrogen gas is used to insulate the conductors. Nitrogen gas is less effective than dielectric fluids due to suppressing electrical discharges and cooling. To compensate for this, the conductors' insulation is about 20 percent thicker than the insulation in fluid-filled cable. Thicker insulation reduces the amount of current the line can safely and efficiently carries. In case of a leak or break in the cable system, the nitrogen gas is easier to deal with than the dielectric oil in the surrounding environment [8].

Solid or paper insulation cables have small voids in the butt gaps of the insulation when the insulation is cold. Under the influence of the electric field partial discharges might occur in the voids. Under ac voltages the voids could ignite in every half-cycle. Many repeated partial discharges at the same location can lead to paper decompose and

eventually to breakdown. For this reason solid and paper insulation type of cable cannot be used for high voltage AC transmission system [8]. From above reasons, XLPE cable is chosen as an appropriate cable for LFAC transmission system.

3.3 Cable Model

3.3.1 Transmission line model under low frequency

The analysis of transmission line model under low frequency operation is performed by using long line (more than 250 km) model to understand the relationship between transmission line impedance and transmitting frequency. Figure 3.1 shows long transmission line model, and can be described by differential equations[3].

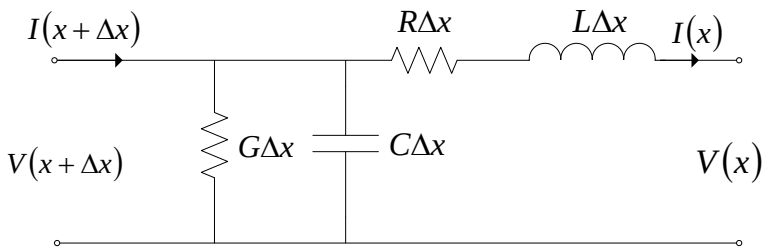

Figure 3.1 Long transmission line model

The transmission line operates with sinusoidal time-varying waveforms. The voltage and current in each transmission section can be derived as (3.1)[4].

$$\begin{aligned} \frac{\partial V}{\partial x} &= (R + j\omega L)I \\ \frac{\partial I}{\partial x} &= (G + j\omega C)V \end{aligned} \tag{3.1}$$

where; $Z = R + j\omega L,\ Y = G + j\omega C$

Differentiating for voltage given by (3.2)

$$\frac{\partial^2 V}{\partial x^2} - \left[(RG - \omega^2 LC) - j\omega(RC + LG)\right]V = 0 \tag{3.2}$$

The voltage and current are expressed as follows:

$$V(x) = \left(\frac{e^{\gamma x} + e^{-\gamma x}}{2}\right) V_R + Z_c \left(\frac{e^{\gamma x} - e^{-\gamma x}}{2}\right) I_R$$
$$I(x) = \frac{1}{Z_c}\left(\frac{e^{\gamma x} - e^{-\gamma x}}{2}\right) V_R + \left(\frac{e^{\gamma x} + e^{-\gamma x}}{2}\right) I_R \quad (3.3)$$

where $Z_c = \sqrt{Z/Y},\ \gamma = \sqrt{ZY}$

With hyperbolic function, the voltage and current in the distributed line for *x* km distance can be expressed in matrix format as follows:

$$\begin{bmatrix} V(x) \\ I(x) \end{bmatrix} = \begin{bmatrix} A(x) & B(x) \\ C(x) & D(x) \end{bmatrix} \begin{bmatrix} V_R \\ I_R \end{bmatrix} \quad (3.4)$$

where $A(x) = D(x) = \cosh(\gamma x)$

$B(x) = Z_c \sinh(\gamma x)$

$C(x) = (1/Z_c) \sinh(\gamma x)$

In this model, considering transmission model parameter *A(x)*

$$A(x) = \cosh(\gamma x)$$
$$= \frac{e^{\sqrt{(R+j\omega L)(G+j\omega C)}x} + e^{-\sqrt{(R+j\omega L)(G+j\omega C)}x}}{2} \quad (3.5)$$

Equation (3.5) shows that the resistance in low frequency transmission system can be designed the same as in 60 Hz, and the reactance is obtained by multiplying the 60 Hz reactance with the frequency ratio.

3.3.2 Cable model for LFAC

To consider all proposed system configurations, the cable model at operating maximum voltage level at 500kV, and the capacity is set maximum to 1400 MW(1 pu). The length of cable is varying from 50 km to 500 km and transmission frequency is set at 1 Hz and 10 Hz for the simulation and 1 Hz, 10 Hz and 60 Hz for calculation. Cable model as the nominal model is shown in Figure 3.2

The cable model parameters can be calculated from equation (3.6) [5], and the transmission power cable is modeled by using the single-core XLPE underground power cable from ABB with the parameters values of D = 139.2, d = 112.8 and ε_s = 2.3 for the XLPE.

$$\begin{aligned} C &= \frac{0.02413\varepsilon_s}{\log_{10} D/d} \\ &= 0.6 \quad [\mu F / km] \\ L &= 0.05 + 0.4605 \log_{10} \frac{D}{r} \quad [mH / km] \\ &= 0.3 \quad [mH / km] \\ R_{ac} &= 0.0164 \quad [\Omega / km] \end{aligned} \tag{3.6}$$

where; D = Outside diameter of insulation
d = Inside diameter of insulation

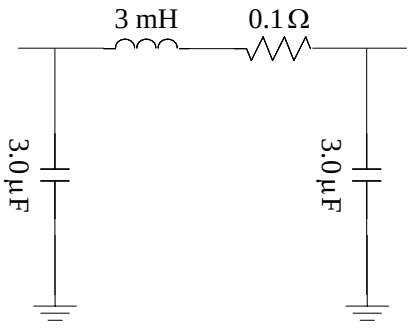

Figure 3.2 Cable model at 10 km for the LFAC

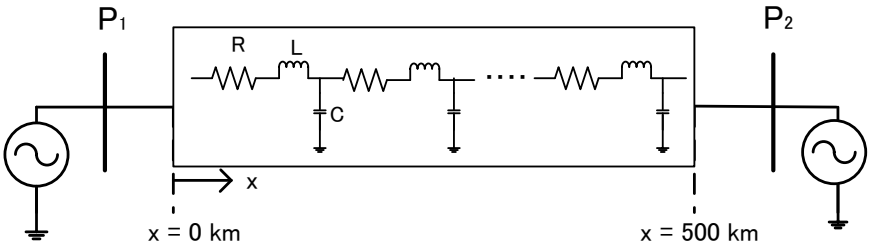

Figure 3.3 Cable model for simulation

Figure 3.3 shows the cable model connected for simulation in the LFAC transmission system. This model can represent cable length from 0-500 km. Three configurations of low frequency ac transmission system, which are single-phase, two-phase and three-phase, are simulated by using these cable parameters to study system behavior for each configuration on LFAC transmission system.

3.4 Analysis on Transmission Frequency with Voltage and Cable Length

The analysis in different voltage level and transmitting frequency on low frequency side by comparison of transmission capacity is performed.

In this section, maximum transmitting active power is shown to find the optimum point of operating frequency and voltage level with cable length. The amount of transmitting active power to cable length can be expressed as (3.7).

$$P = \sqrt{S_{th}^2 - \left(2\pi f C l V_l^{\,2}\right)^2} \qquad (3.7)$$

$$S_{th} = \sqrt{3} I_i V_l$$

where; P = maximum transmission power

f = transmitting frequency

C = cable capacitance

l = cable length

V_l = voltage level

I_i = rated current

It is simulated by using cable length from 50 km to 500 km with several voltage levels at 66 kV, 150 kV, 275 kV and 500 kV and transmission frequency is used as a parameter at 1, 10 Hz for simulation and 1, 10 and 60 Hz for calculation by (3.7). The transmission power cable is modeled by using single-core XLPE underground power cable from ABB[9].

Table 3.1 : Parameters of XLPE underground power cable [9]

	66kV	**150kV**	**275kV**	**500kV**
Maximum voltage (kV)	72.5	170	300	550
Rated current (A)	1730	1705	1705	1705
Cross section (mm^2)	2000	2000	2000	2000
Inductance (mH/km)	0.45	0.47	0.49	0.51
Capacitance (μF/km)	0.52	0.31	0.23	0.19

The relationship between sending end active power (P) and maximum transmission distance is calculated using parameters from Table 3.1. These parameters are used in the cable model shown in Figure 3.4 using (3.7) to obtain the transmission power in each voltage level.

In order to confirm with real application, simulation using the same parameters are conducted with PSCAD/EMTDC. The comparison results are shown in Figure 3.4. It shows that at 60 Hz, the system can transfer power with the shortest length of cable. In the contrary, transmission frequency at 10 Hz and 1 Hz, the transmission distance can be extended far more than 60 Hz at every voltage level. Calculation results are shown in dash line and simulation results are shown in solid line on every voltage level.

Considering the result in terms of voltage level, the transmission capacity in low voltage level does not much different among several frequencies. However, the differences become noticeable in higher voltage level. When the transmission system operates at higher voltage level, lower frequency has much more transmission capacity comparing with conventional frequency.

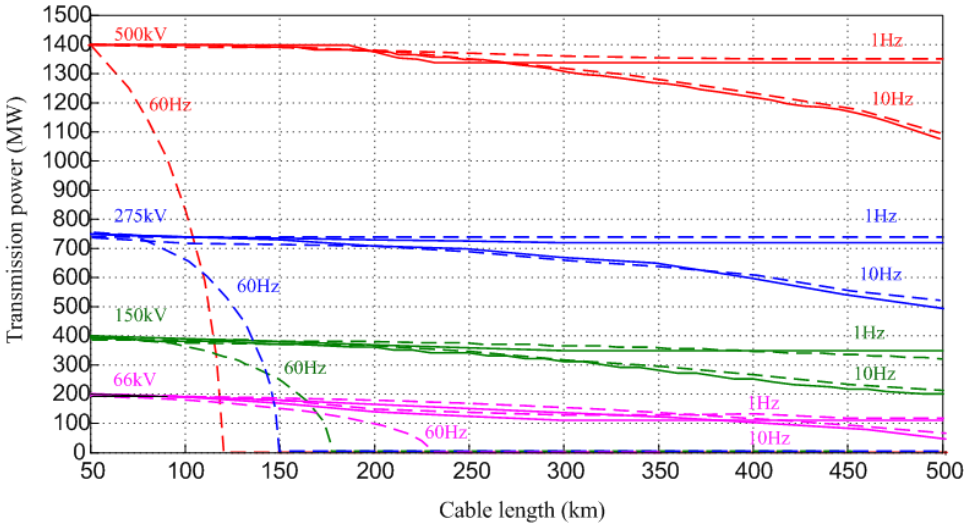

Figure 3.4 Transmission power to cable length

3.5 Analysis on Transmission Frequency with System Response

Another study in this section is considering on time response with several transmission frequencies. Time response analysis of the system is performed in this section to choose a suitable range of operating frequency. The simulation results are carried out by using the proposed single-phase LFAC configuration for easy understand. In the simulation, transmitting frequency is assumed as 1 Hz that is very low frequency, 10 Hz and 20 Hz which are medium frequency.

Figure 3.5 shows transmitting power waveforms on low frequency side, the reference frequency is 1 Hz, 10 Hz and 20 Hz at the maximum of voltage of 500 kV. Transmitting power is set at 300 MW, however power flow reverses at 2.5s.

In these simulation results, some ripple appears on transmission frequency operations at 10 Hz and more effect at 20 Hz because frequency is constant value in control scheme. However, in this chapter only frequency and system time response are considered without changing any parameters in control scheme.

As the result, when power flow direction suddenly changes, we can see that 1 Hz system has the longest time delay but 10 Hz system has only 0.1 s before power flow is settled again. On 20 Hz system, the result shows a small delayed time before power becomes constant at the reference point. From the simulation results, in terms of time response and frequency, for very low transmitting frequency such as 1 Hz has very slow time response that is a drawback to power transmission system. However, if we employ higher frequency such as 10 Hz, the time response is much better than 1 Hz. At transmitting frequency 20 Hz, the time response is almost the same with 10 Hz, but ripples in transmission power waveform is observed due to limitation of cycloconverters. From above consideration, 10 Hz frequency is the best choice for the transmission frequency.

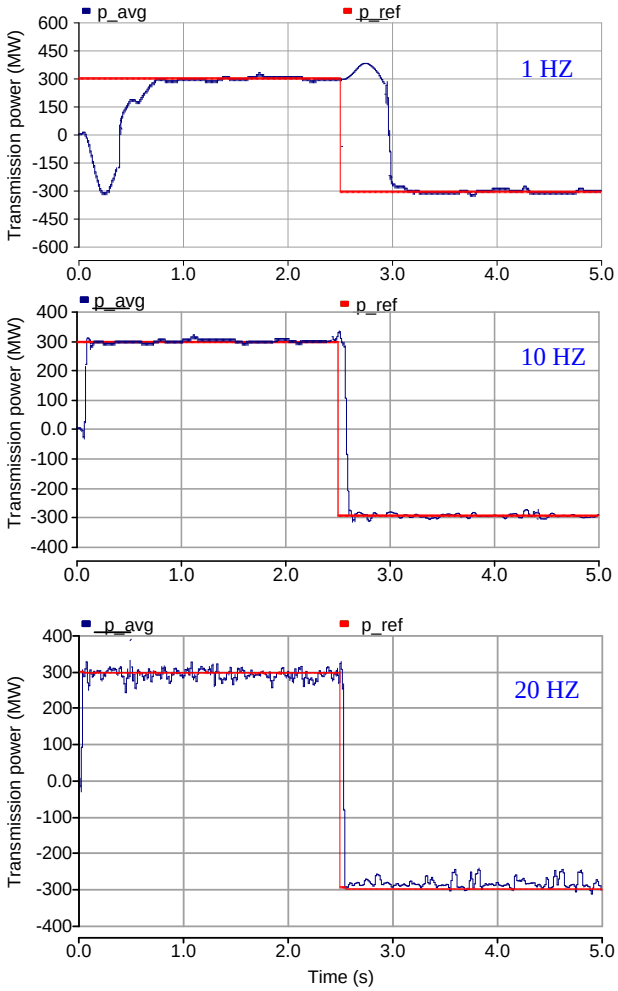

Figure 3.5 Comparison between transmission frequency and system time response results on three operating frequencies.

3.6 Summary

The transmission model for long distance is described that the parameters for 60 Hz is applicable in LFAC system, however some parameters such as reactance needs to be multiplied with frequency ratio. The cable model for applying in the LFAC proposed system is performed. The characteristic of transmission capacity of different transmission frequency and voltage level is presented. The characteristic of different transmission frequency with system responding time are explained. The results show that high voltage level with lower frequency than 60 Hz can accomplish the transmission distance target 500 km. As for system responding time, the results show that too low transmitting frequency, the time responding is too slow. Therefore, the optimum point of transmitting frequency in this proposed LFAC system is at 10 Hz. The information in this section can lead us to choose the proper operating frequency for LFAC transmission system.

References

[1] S. Liu, X. Wang, L. Ning, B. Wang, M. Lu, and C. Shao, “Integrating Offshore Wind Power Via Fractional Frequency Transmission System” IEEE Transaction on Power Delivery, No. 99, pp. 1-8 (June, 2015).

[2] P. G. Slade and R. K. Smith, “A comparison of the short circuit interruption performance using transverse magnetic field contacts and axial magnetic field contacts in low frequency circuits with long arcing times”, Discharges and Electrical Insulation in Vacuum International Symposium 2004, vol. 2, pp.337-340, (September, 2004).

[3] J. Glover, M. Sarma, and T. Overbye, “Power System Analysis and Design”, New York, NY, USA, Cengage Learning, (2011).

[4] T. Ngo, M. Lwin, and S. Santoso, “Steady-State Analysis and Performance of Low Frequency AC Transmission Lines” IEEE Transaction on Power System, Vol. 31, No. 5, pp. 3873-3880 (September, 2016).

[5] L. Grigsby, “Underground distribution”, Electric Power Distribution Handbook, 2nd ed., CRC Press, Florida, USA, Vol. 3, pp. 167-168 (2003).

[6] C. Hao, M. H. Johnson, and D. C. Aliprantis, “Low-Frequency AC transmission for offshore wind power”, IEEE Transactions on Power Delivery, Vol. 28, No.4, pp.2236-2244 (October, 2013).

[7] T. Funaki and K. Matsuura, “Feasibility of the low frequency AC transmission”, Proceeding of the Power Engineering Society, Winter Meeting, Singapore, pp.2693-2698 (23-27 January, 2000).

[8] T. Worzyk, “Submarine Power Cables Design, Installation, Repair, Environmental Aspects”, xxth ed., Springer, Chapter 2, (2009).

[9] ABB, “XLPE Underground Cable System User's Guide [Online]”, Available at: http://www.abb.com (August, 2016).

Chapter 4

Power Control of Low Frequency AC Transmission System

4.1 Introduction

A low frequency ac transmission system (LFAC) can be considered as a promising transmission system for a long distance and large scale transmission system by using line commutated converters. One of the promising applications of this system is the operation on multi-terminal system [1]. As for the integration of other types of power plants such as offshore wind power, HVDC or multi-terminal HVDC transmission with the main power grid is a subject of ongoing research [2]-[3]. In the case of LFAC, it could be easier to integrate to the existing ac power plant. It can be built with commercially available power system components, such as the transformer and cables designed for regular frequency [4]. The transformer could be derated by a factor of transmitting frequency, with the same rated current but partial of the original rated voltage [5]. Given this information, the installation of LFAC can be easily paralleled with the existing transmission line.

For the application on the multi-terminal system with line commutated converters, the operation of multi-terminal HVDC is complicated [6]. It is difficult to control power flow directions among terminals without an extra dc power flow controller, which means it needs more complexity, devices and extra costs.

In terms of the power control scheme for this LFAC transmission system, up to now, only one reference can be found. [10] has been briefly mentioned about the concept of the

power control method for the two terminals system. However, no detail on the power control scheme was presented. In addition, the cycloconverters do not have synchronizing power to the low frequency side. Therefore, absolute phase reference on the low frequency side is required to synchronize power on the low frequency output assisted by reference time signal from GPS (Global Positioning System) or SDH (Synchronous Digital Hierarchy), which is difficult to operate in the multi-terminal system application.

The goal of this chapter is to present a new power control method for the application on multi-terminal LFAC transmission system. The controller is designed by using the advantages of Virtual Synchronous Generator (VSG) with governor control [11]. Furthermore, the proposed control scheme is applied in two-phase multi-terminal system of LFAC to perform and verify control operation by PSCAD/EMTDC software.

4.2 Control Strategies for LFAC for the Two Terminal System

The basic operation of the LFAC transmission system can be described by considering two terminals: sending and receiving ends. A cycloconverter is appied to lower the line frequency from 50/60 Hz to a smaller amount. At the receiving end, another cycloconverter is operated to convert the fraction frequency back to the grid frequency. These two conversions obtain firing angle signal from the designed control scheme which is achieved by the different phase angles of different terminals. This is one of the common control methods of the LFAC transmitting power control. The active transmitting power over transmission lines can be expressed by (4.1).

$$P = \frac{V_s V_R}{X} \sin \delta \tag{4.1}$$

where, V_S : the sending end voltage

V_R : the receiving end voltage

X : line reactance

δ : transmitting angle

As indicated by (4.1), the voltage control scheme concept with the LFAC transmission system can be described in Figure 4.1.

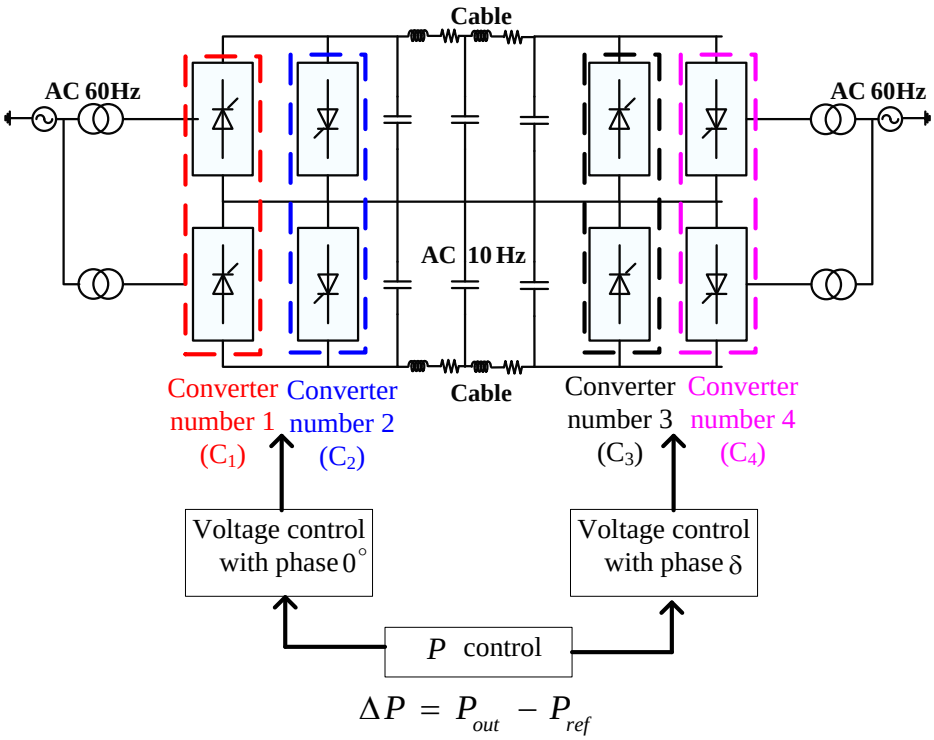

Figure 4.1 Concept of LFAC control scheme

As show in Figure 4.1, at the sending end, the phase is set to constant value of 0° and the amount of transmitting power is determined by the phase difference from the receiving end.

4.2.1 Mode operation of cycloconverter

A cycloconverter operates by following the modes in Table 4.1. On the low frequency side, a positive current waveform can be obtained from converter number 1 and number 4 operations. During the zero crossing point, all converters are blocked by the blocking signal from the controller. Negative current waveform can be received from converter number 3 and number 2 by reversing the current direction.

Table 4.1 Mode operation of cycloconverter

	Positive Current	**Zero Cross Point**	**Negative Current**
Rectifier NO. of operating converter	C_1	Block	C_3
Inverter NO. of operating converter	C_4	Block	C_2

Positive current mode

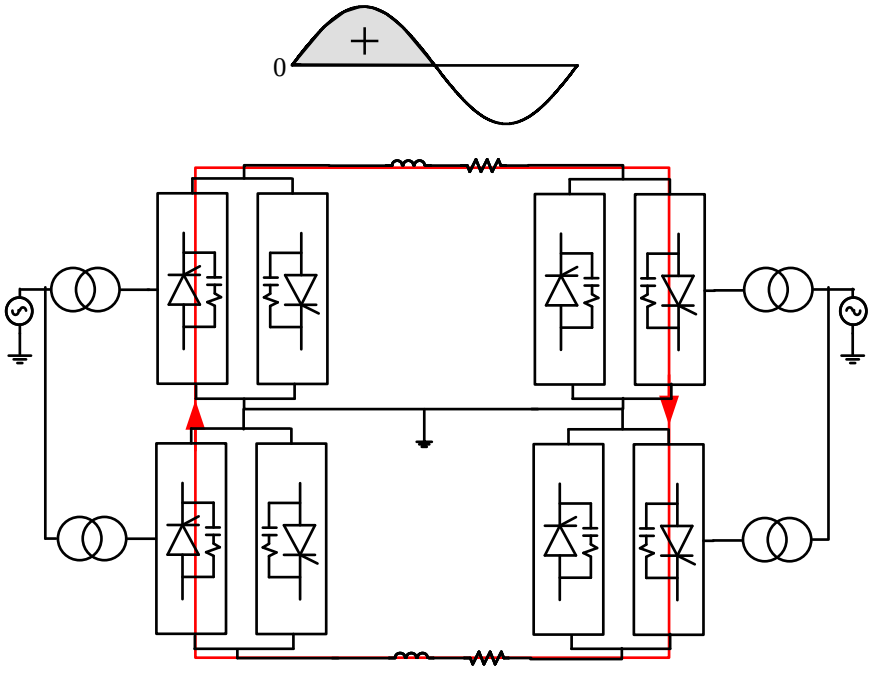

(a)

Zero-cross point

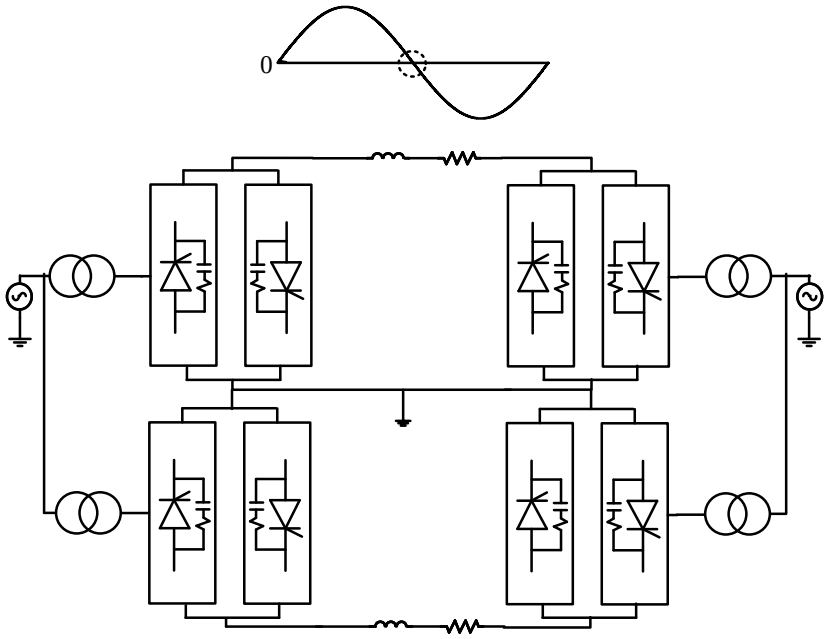

(b)

Negative current mode

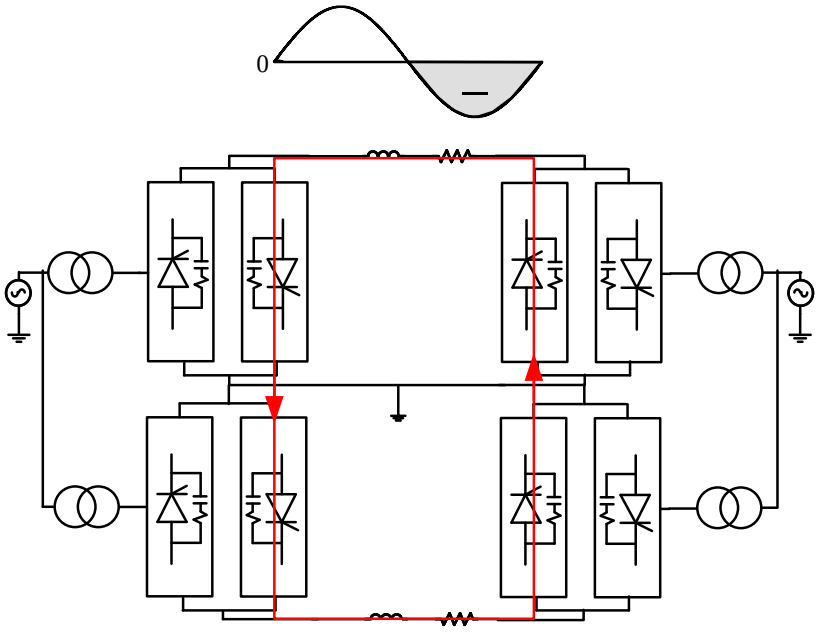

(c)

Figure 4.2 Mode operation of cycloconverter: (a) Positive current mode; (b) Zero cross point mode; (c) Negative current mode

Figure 4.2 shows the mode operation of cycloconverters that applied in the proposed LFAC transmission system. During positive half cycle of output current, a pair of converter as shown in Figure 4.2(a) is working following the firing angle signal from the designed control scheme. The zero cross point mode is working to block all of the converters from conduction, and no current circulates between the converters as shown in Figure 4.2(b). For the negative half cycle, the converter as shown in Figure 4.2(c) is working to generate the negative output current on the low frequency side.

4.2.2 The proposed voltage control scheme

Considering the mode control of the cycloconverter, this converters works as a two-set of HVDC anti-parallel connections and their inputs are a sinusoidal waveform instead of a constant value. From this point of view, the voltage control scheme can be designed by using HVDC concepts, which the operation is much easier to understand.

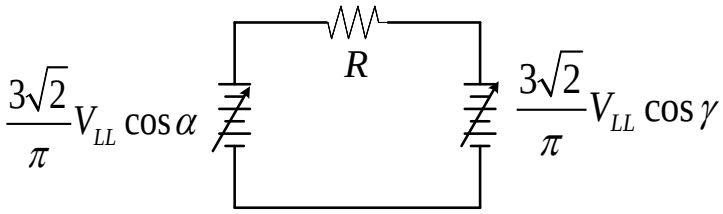

Figure 4.3 Equivalent circuit of HVDC link

$$V_d = \frac{3\sqrt{2}}{\pi}V_{LL}\cos\alpha$$

$$\frac{3\sqrt{2}}{\pi}V_{LL} = V_{d0} \tag{4.2}$$

$$V_d = V_{d0}\cos\alpha$$

From Figure 4.3, the equation (4.2) is obtained to design the voltage control scheme of the LFAC by substitute V_d (dc voltage) with V_{dLF} in Figure 4.4, and V_{LL} is RMS (Root Mean Square) value of 60 Hz side ac line to line voltage. The designed control block diagram is shown in Figure 4.4, which voltage reference value of low frequency side

$v_{LF}^{*} = E_{max}sin(\omega t + 0^{\circ})$ is for reference angle side, $E_{max}\sin(\omega t + \delta)$ is on another side and v_{LF} is the measured instantaneous voltage on low frequency side.

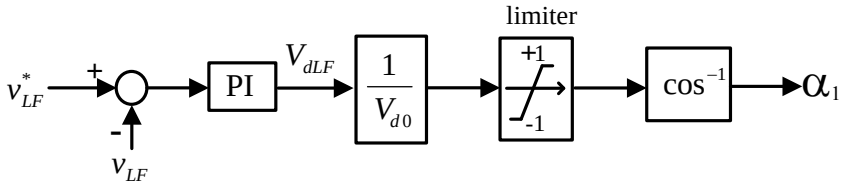

Figure 4.4 Voltage control of LFAC

To obtain the phase reference (δ), the power control scheme needs to be considered. Equation (4.1) shows the amount of transmitting power between two terminals following the reference power. Furthermore, power on the low frequency side is not constant, thus the moving average control method is adopted to average the amount of power on the low frequency side. The power control block diagram can be achieved as shown in Figure 4.5.

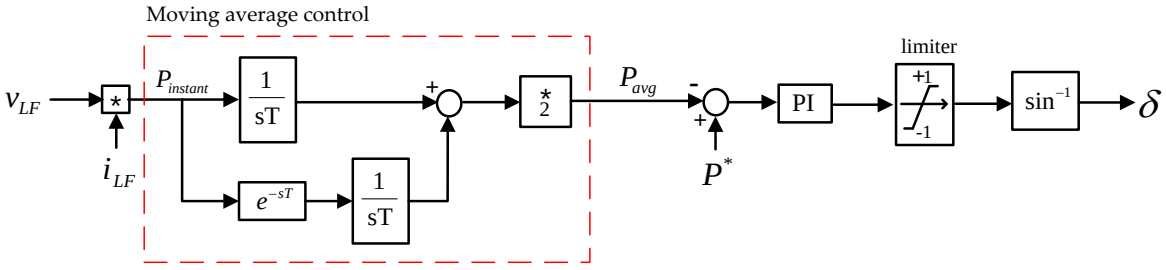

Figure 4.5 Power control of LFAC

To control the amount of transmitting power between each terminal, the power control scheme is chosen to apply to cycloconverters in the LFAC transmission system. According to the system circuit mode and transmitting power in (4.1), power reference (P*) is compared with average power (P_{avg}) to obtain phase difference (δ) for the voltage reference.

4.2.3 Proposed frameworks for current limiter and extinction angle control

For the protection of over current and commutation failure, a current limiter and extinction angle control are applied in this system. The current limiter is used to limit over current during transmission of power where i_{LF} = the measured instantaneous current on low frequency side. The current control scheme is shown in Figure 4.6.

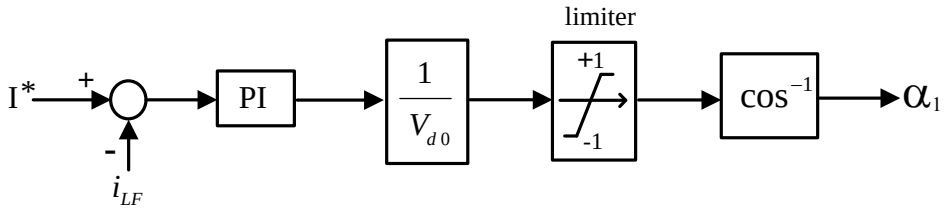

Figure 4.6 Current limiter of LFAC

As for current controller, it is working for a protection of converters by the reference current I^* defined with fixed value according to the current rating of the thyristor device. The affects of both the voltage controller and current controller to the firing angle α_i can be considered in three cases as follow:

Case 1: Normal operation

In this case, the voltage controller works as the main controller to generate the firing angle α_i while, the current controller does not work under the condition $i_{LF} < I^*$ to generate the firing angle α_i.

Case 2: Over current operation

In this case, the current controller works as the current limiter by comparing the rating current with measured current. If $i_{LF} < I^*$, the firing angle α_i is limited.

Case 3: Extinction angle protection

Obtained α_i is compared with the firing angle from the extinction angle controller. If the obtained α_i is greater than the α_i from the extinction angle controller, α_i is changed to the value from extinction angle controller.

For line commutated converters, in practice, it has some overlapping angle due to the commutation reactance. The constant extinction angle control (γ) is used to avoid commutation failure. As shown in Figure 4.7, this extinction angle control works by comparing gamma reference with gamma measure, then the minimum firing angle is chosen to be gating pulse for cycloconverters. The typical value of extinction angle (γ) is set at 18° for 60 Hz of the ac system.

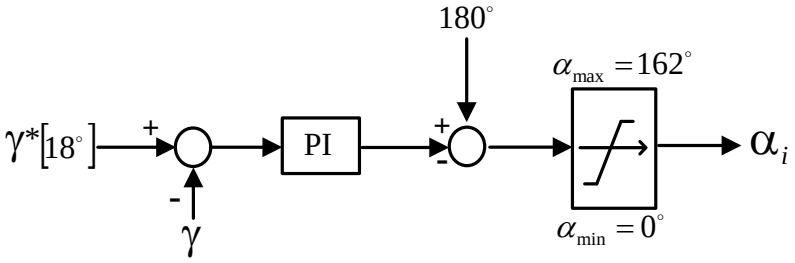

Figure 4.7 Extinction angle control of LFAC

During the zero cross point current, a gate block control scheme is applied to every converter as shown in Figure 4.8.

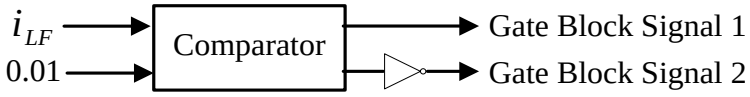

Figure 4.8 Gate block control scheme of LFAC

In the complete developed control scheme of LFAC as shown in Figure 4.9, the same control system is applied for every converter to control the amount of transmitting power between terminals. Following the converter operation mode, δ is set at 0° for one side of the converter. On another side of the converter, δ depends on the reference of transmitting power to control the amount and direction.

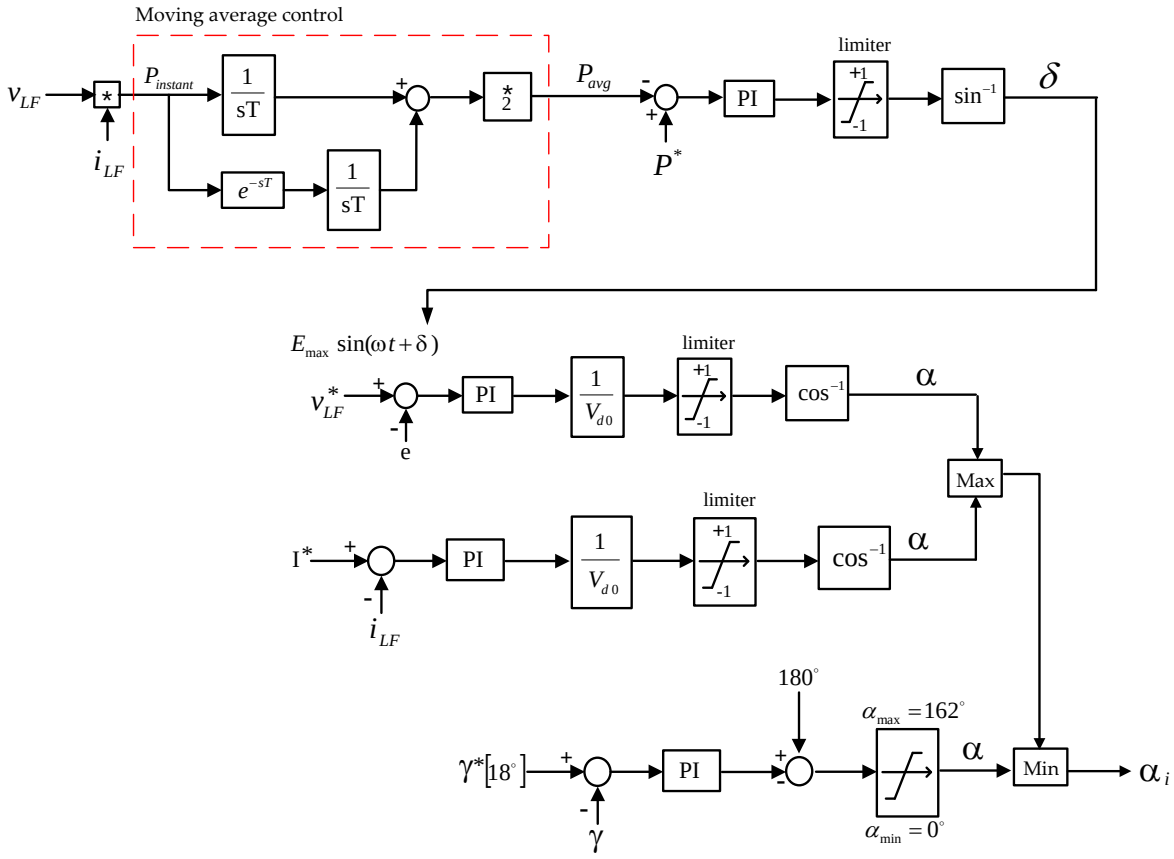

Figure 4.9 The proposed overall control scheme of LFAC

4.3 Control Strategies for Multi-Terminal LFAC

4.3.1 Virtual Synchronous Generator (VSG) control

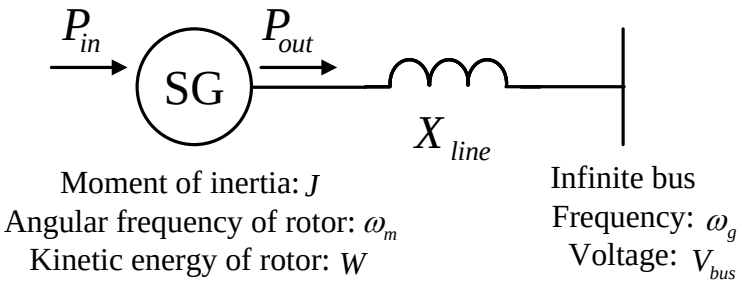

Figure 4.10 Model of synchronous generator

The model of synchronous generator is shown in Figure 4.10. In the concept of VSG control, converters are controlled to behave like a synchronous generator. The control scheme of VSG is based on the swing equation of synchronous generator. VSG has virtual inertia which is realized by equation (4.3).

$$M = \frac{J\omega_m^{\ 2}}{P_{base}} \tag{4.3}$$

In equation (4.3), M is inertia constant, J is inertia moment of rotor, ω_m is the speed of the rotor, and P_{base} is base power of the system. Kinetic energy of VSG (E_{VSG}) can be described as

$$E_{VSG} = \frac{1}{2} J\omega_m^2 \tag{4.4}.$$

From this energy equation, power swing equation of generator can be expressed as (4.5). As there are damper windings on the rotor of the synchronous generator, damping term is added to swing equation as follows:

$$P_{g0} - P_g = J\omega_m \frac{d\omega_m}{dt} - Ds \tag{4.5}$$

where P_{g0} and P_g are input and output power of synchronous generator, D is damping coefficient (pu) and s is a slip that is defined by $s = \frac{\omega_g - \omega_m}{\omega_g}$ where ω_g and ω_m are synchronous frequency and virtual rotating frequency, respectively.

4.3.2 VSG control on LFAC

In conventional ac power system, the stability of the system can be defined with the synchronous machines of the system responding to a disturbance from a normal operation. The motion of the rotor of a synchronous machine is based on the swing equation. The proposed LFAC transmission system is also operated in synchronized with the low frequency same as conventional AC power system. However, the LFAC system does not have rotating machine, which is different from conventional AC system. The firing signal of the valve in the frequency converter at LFAC terminal must be

synchronized. Therefore, absolute phase reference to the low frequency is required for stable operation. Reference [10] proposed to use reference time signal obtained from GPS or SDH at the terminal as shown in Figure 4.11, which is not so applicable by operating in multi-terminal system.

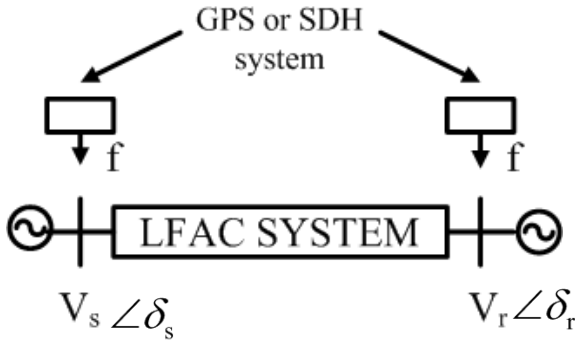

Figure 4.11 LFAC transmission system with reference time signal

VSG is proposed for multi-terminal LFAC application to synchronize the transmitting frequency among terminals without GPS or SDH. VSG control has the advantage that parameters in its swing equation can be adopted in real time to obtain a faster and more stable operation.

The proposed control scheme to control the amount of transmitting power and direction among several terminals is explained in this section. In a multi-terminal application of LFAC (LCC-MTLF), Virtual Synchronous Generator (VSG) is introduced to synchronize the phase and frequency among terminals instead of a communication link or global positioning system (GPS). The VSG model is based on the swing equation of synchronous generators. Based on this equation, the relation between the output power P_{out} and the input power P_{in} is shown in (4.6).

$$P_{in} - P_{out} = J\omega_m \frac{d}{dt}\omega_m + D\left(\omega_m - \omega_g\right) \tag{4.6}$$

where $\boldsymbol{\omega_m}$ is the virtual rotating angular frequency, $\boldsymbol{\omega_g}$ is the angular frequency, $\boldsymbol{J}$ is the moment of inertia of rotating mass, and $\boldsymbol{D}$ is the damping factor of the damping power introduced by the damp winding.

The concept of VSG control is shown in Figure 4.12. For the power balance between $\boldsymbol{P_{in}}$ and $\boldsymbol{P_{out}}$, according to the concept of VSG control, if the network frequency is lower than the reference frequency ($\boldsymbol{f^*}$), then the generator increases its power into the network.

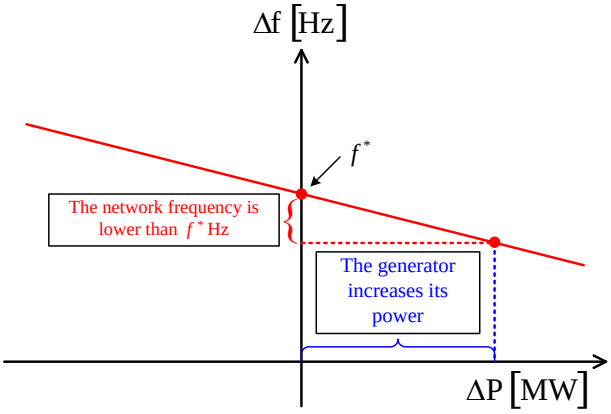

Figure 4.12 Concept of VSG control

Figure 4.13 shows the VSG control scheme applied to the LFAC transmission system. The VSG control is emulated to the swing equation in the VSG block.

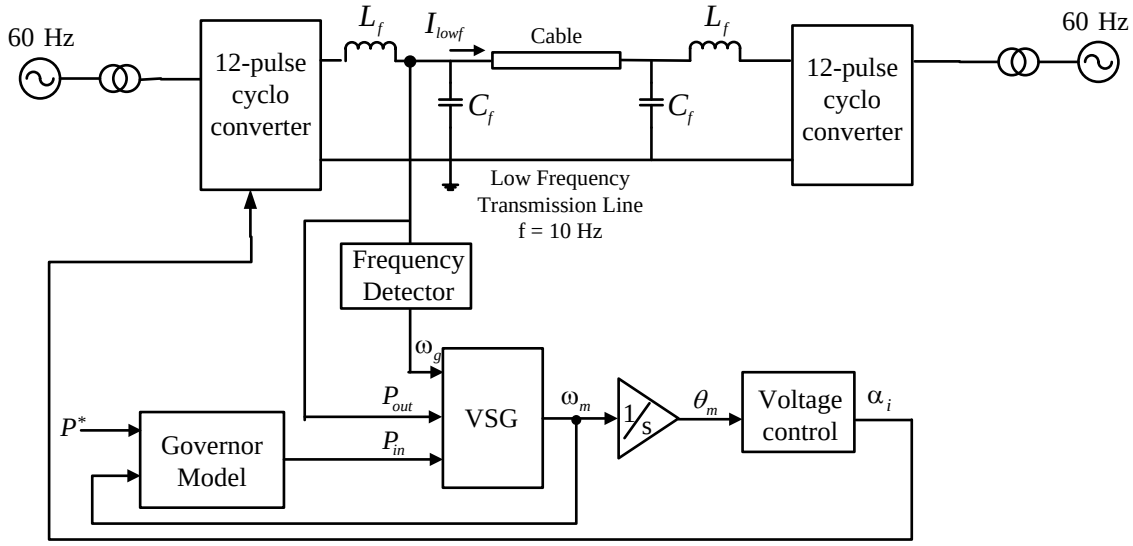

Figure 4.13 Block diagram of the VSG control scheme for LFAC

For simplification, the damping factor D is considered as a small constant parameter. As the swing equation is a differential equation, an algorithm based on the Runge-Kutta iterative method is used to solve the angular frequency ω_m following the flow chart as shown in Figure 4.14. The calculated ω_m provides the frequency reference for the governor model and phase reference θ_m through an integrator. P_{base} is the rated capacity of transmission power.

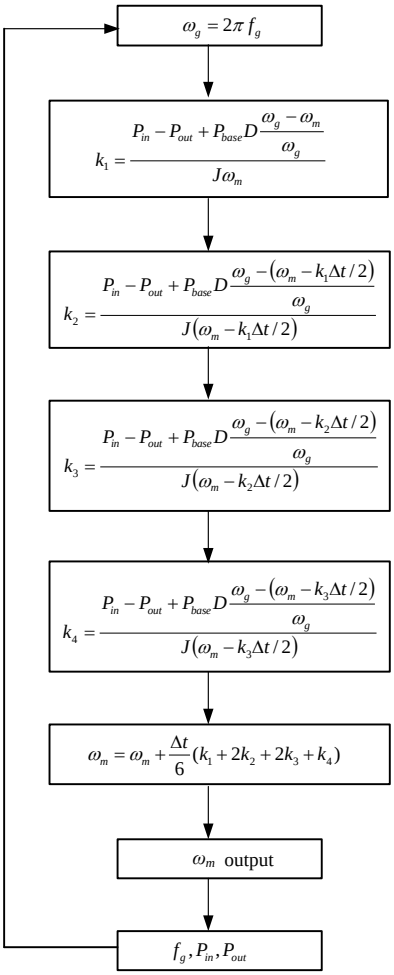

Figure 4.14 Flow chart of solving swing equation by Runge-Kutta method

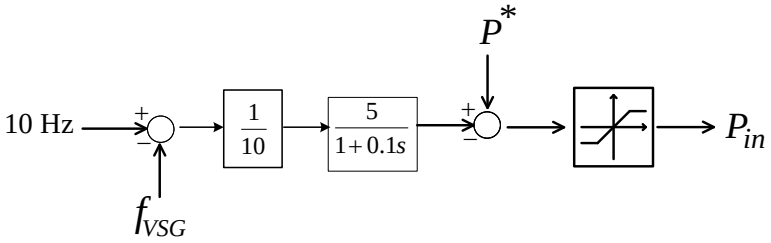

Figure 4.15 Governor control scheme

The block of the governor model is shown in Figure 4.15. The governor model is implemented to tune the input power command based on the frequency deviation. The transfer function of the governor control can be expressed as (4.7), where $K_p = 5$, $T_d = 0.1$ were chosen from trial-and-error tuning method.

$$P_{in} = P^* + \frac{K_p}{1+T_d s}\left(f^* - f_{VSG}\right) \tag{4.7}$$

In the VSG control part as shown in Figure 4.16, P_{in}, P_{out} and low frequency side frequency $(\boldsymbol{f_g})$ are inputs of the VSG control unit. In each control cycle, the momentary $\boldsymbol{\omega_m}$ is calculated via the application of the forth-order Runge-kutta iterative method inside the VSG block to generate the virtual phase angle $\boldsymbol{\theta_i}$ (i =1,2,3) sent through the voltage control unit.

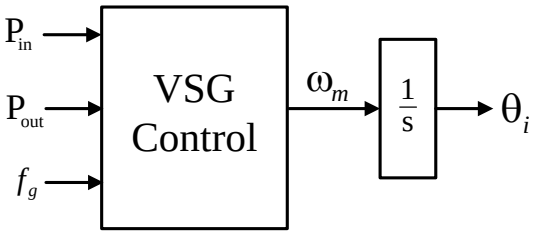

Figure 4.16 VSG control scheme

As for the voltage control scheme, the concept of the control operation is the same as the voltage control scheme as described in section 4.2.2. When a disturbance occurs, or more load shares are added to the system, the system can stabilize itself by regulating

voltage using this control. The current limiter works by comparing the rating current with measured current from the low frequency side to generate the firing angle to the cycloconverter, which can limit over current by limiting firing angle to the cycloconverter. Also, extinction angle control (γ) is included to avoid commutation failure in a converter.

By combining each part of the control scheme, the complete control scheme of the multi-terminal LFAC transmission system is shown in Figure 4.17. The voltage control receives the virtual phase angle $\boldsymbol{\theta_i}$ from the VSG block to be the voltage reference, then the firing angle $\boldsymbol{\alpha_i}$ is generated and is sent to the cycloconverters.

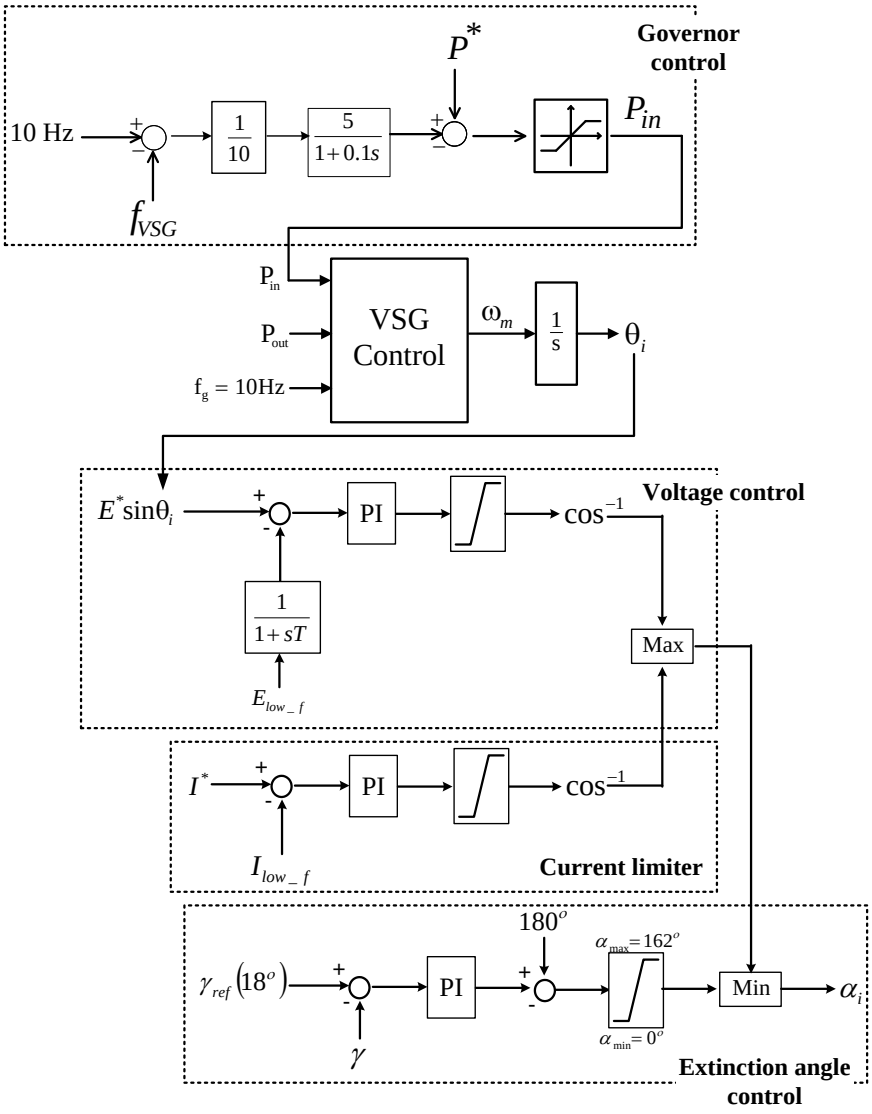

Figure 4.17 Complete control scheme of multi-terminal LFAC

4.4 Simulation Results

To demonstrate the validity of the proposed LFAC system, simulations have been carried out using the tool of the PSCAD/EMTDC software for an LFAC system as shown in Figure 4.18. The maximum power transfer is rated at 1400 MW, and the transmission distance is 500 km. The system parameters are listed in Table 4.2. The transmission power cable is modeled by cascading 50 sections of model cable. Transmission frequency at 10 Hz is used for transmitting power to the transmission target at 500 km. For the operations of this system, each side consists of three phase (Y-Δ) and (Y- Y) transformers and two sets of 12-pulse ac-ac converter connected to the power cable. At the sending point (terminal), the cycloconverter works as a frequency converter changing from utility ac input voltage from 60 Hz to low frequency during transmitting power via the cables. At receiving terminal, another set of cycloconverter works as frequency converter by changing low frequency to 60 Hz of ac voltage. This procedure can be operated by three proposed configurations as stated in chapter 2.

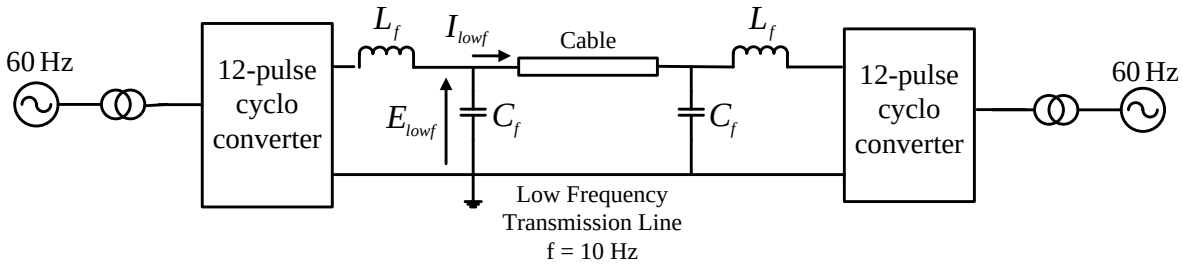

Figure 4.18 The simulated LFAC system configuration

Table 4.2 Parameters of simulated system

Parameter	Value
Maximum power transfer	1400 MW
Grid voltage	500 kV
Line frequency	60 Hz
Transmitting frequency	10 Hz
Transformer	500kV/110kV
L_f	1 mH
C_f	0.02 F

4.4.1 Two-terminal LFAC response

For the simulation of two-terminal LFAC system, two-phase LFAC configurations mentioned previously in chapter 2 is applied with the proposed power control scheme as shown in Figure 4.19.

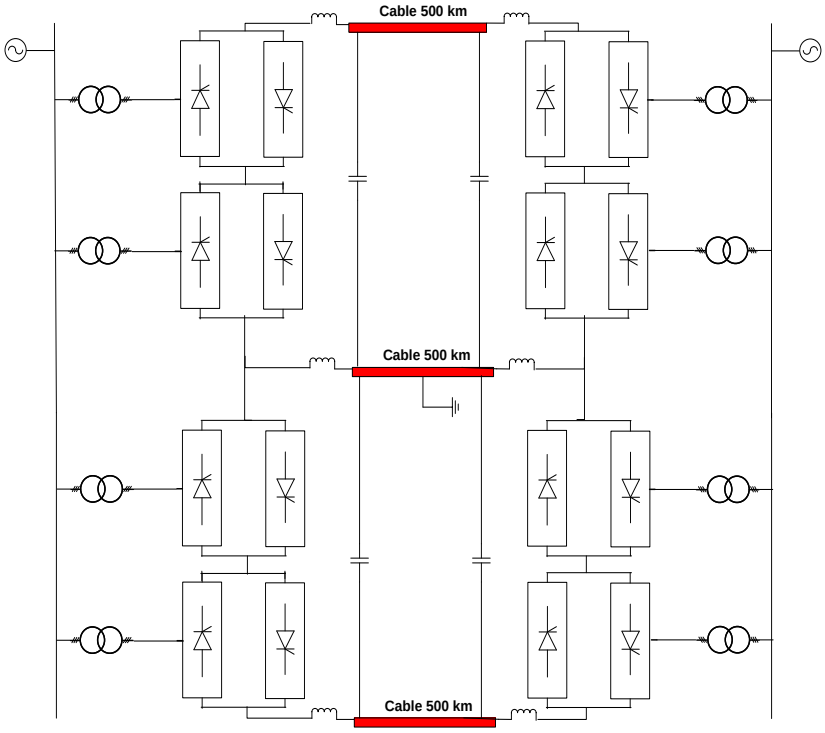

Figure 4.19 Two-phase LFAC configuration

4.4.2 Current limiter and extinction angle control

From the proposed control scheme in section 4.3.2, some simulation results are performed to verify the control operation. Figure 4.20 shows the simulation result of the extinction angle control that cannot exceed the limit at the reference $\gamma = 18^{\circ}$. An extinction angle γ is calculated from the equation $\gamma = 180^{\circ} - (\alpha + u)$ where $u = 12^{\circ}$as shown in Figure 4.20(b). The overlapping angle is around 12° for 60 Hz and γ is controlled at 18°. This result can confirm the extinction angle control scheme works well.

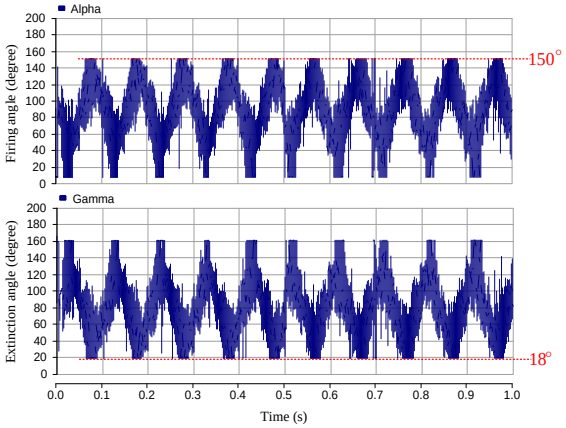

(a)

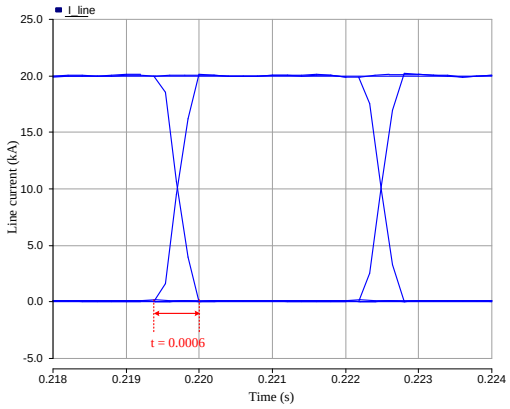

(b)

Figure 4.20 Simulation result of extinction control: (a) Firing angle and extinction angle during operation at 20 kA; (b) Line current waveforms

During the period of transition, the mode of the cycloconverter may cause a spike current. This can malfunction with devices in the system so that the current limiter is used for protection. From the control scheme shown in Figure 4.6, the current limiter is working by comparing the rating current with the measure current from the low frequency side to generate the firing angle to the cycloconverter. The current limiter can limit the over current by limiting the firing angle to the cycloconverter. Figure 4.21 shows the result of the current limiter control that limits current at 20 kA on the low frequency side. *E_lowf* waveform is transmitting low frequency ac voltage, following the reference value from the control scheme. *I_lowf* waveform shows a transmitting current on the low frequency side, which is

limited at 20 kA due to the current limiter. From the result, it can be confirmed that the current limiter control can work properly.

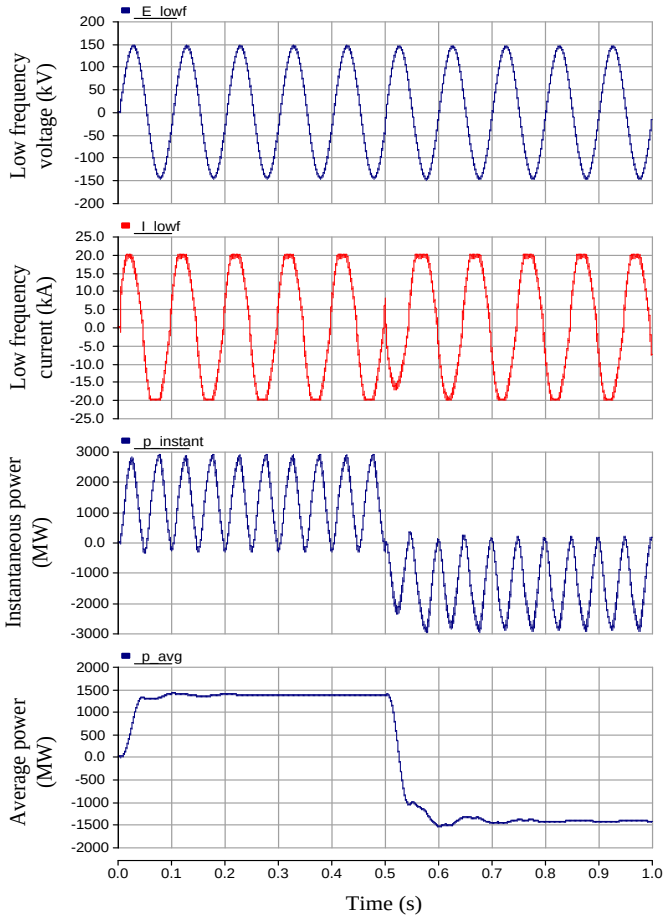

Figure 4.21 Simulation result for current limiter control

4.4.3 *J* and *D* parameters tuning

Trial and error method is used to find the suitable parameter for *J* and *D* in VSG control block. Some results are shown to determine these parameters. Give *J* constant at 1 kg· m^2 and vary *D* = 3, 5, 10 pu. The power reference is 800 MW from t = 0. From the simulation results of step response as shown in Figure.4.22, *J* = 1 kg· m^2 and *D* = 10 pu are chosen because the power response has no oscillation. Other cases have oscillations on the output power waveform.

J = 1 kg· m^2, D = 3 pu

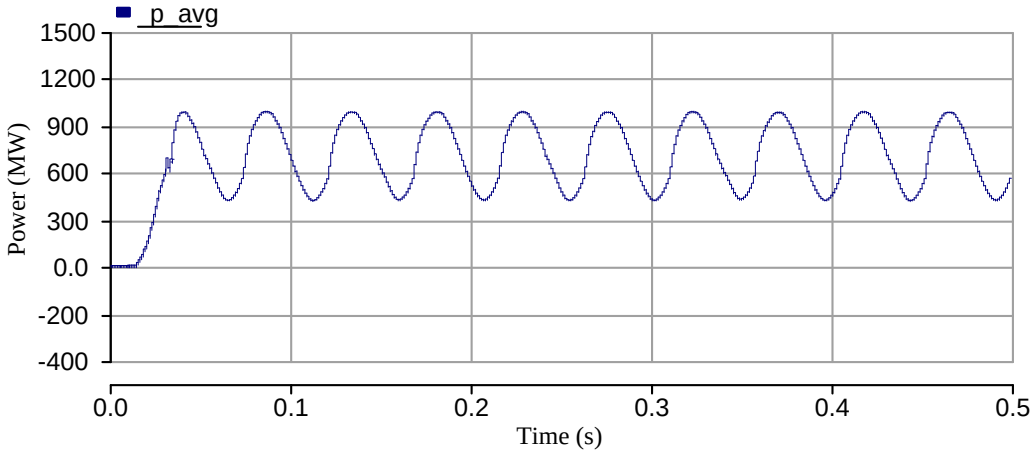

J = 1 kg· m^2, D = 5 pu

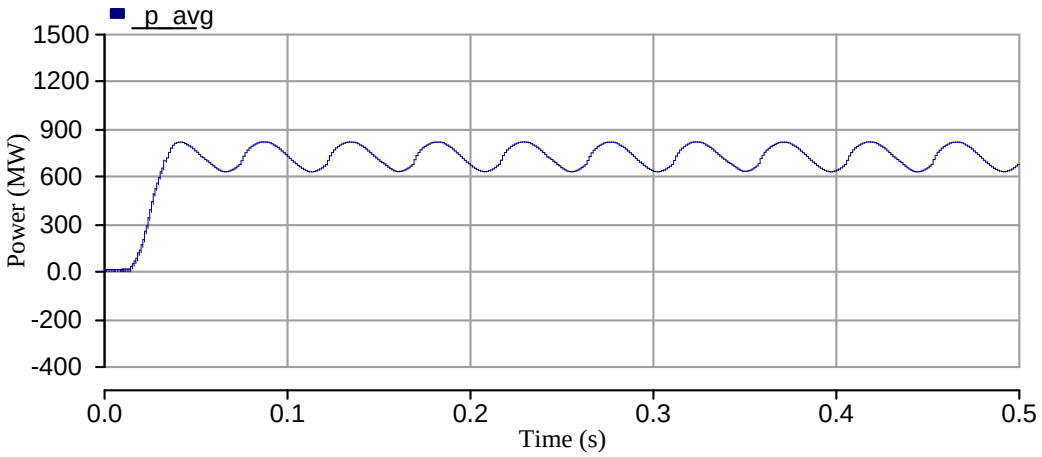

J = 1 kg· m^2, D = 10 pu

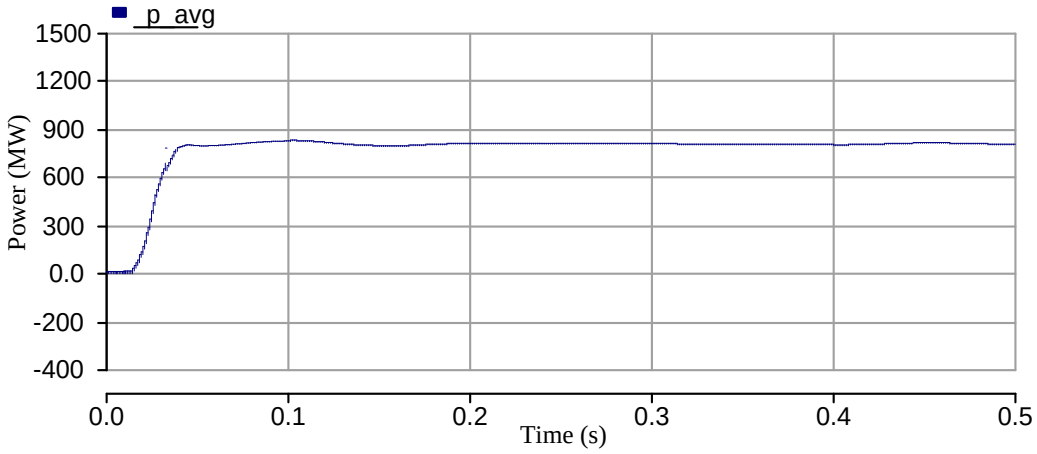

Figure 4.22 Simulation results for J and D tuning

4.4.4 Power reversal and system disturbance

As for two-phase LFAC, the reference frequency used is 10 Hz, the transmitted reference power is 700 MW. Figure 4.23 shows waveforms of voltage E_lowf, current I_lowf, instantaneous power p_instant, average power, p_avg and reference value of transmitted power p_ref on the low frequency side. The power reversal starts at t = 1. With these simulation results, it can be confirmed that the proposed control scheme properly works for the LFAC transmission system.

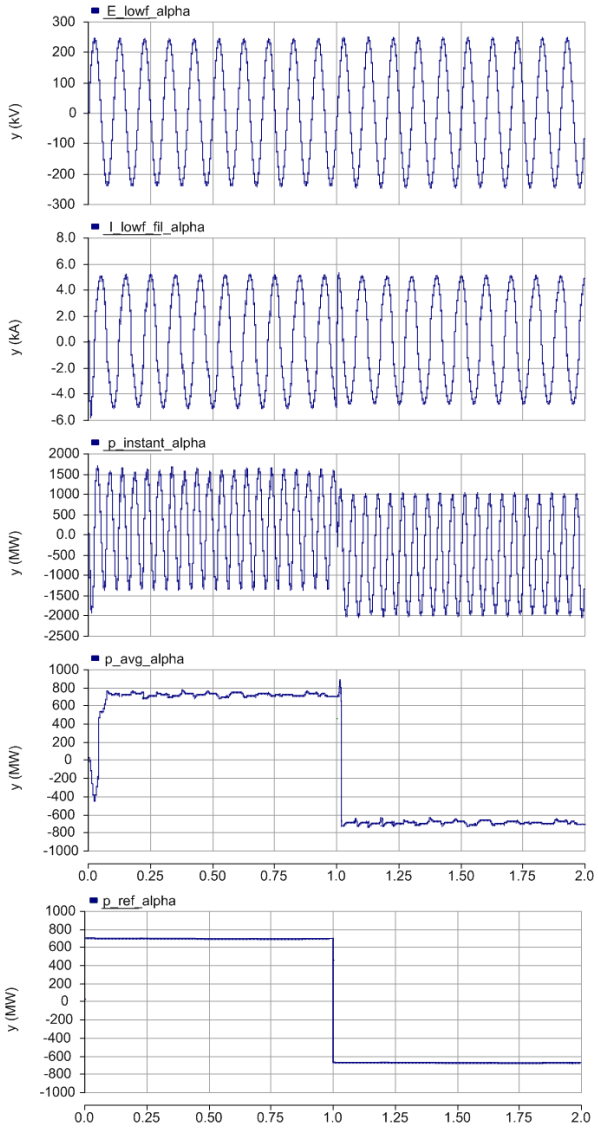

Figure 4.23 Simulation result for power reversal

To evaluate the system response in the presence of faults or disturbances, a step change in reference power is applied. In normal operation the system is operating at a power reference of 700 MW, then the reference power is suddenly changed to 200 MW for one cycle. As can be seen in Figure 4.24, the closed-loop system remains stable and returns to normal operation in a short time.

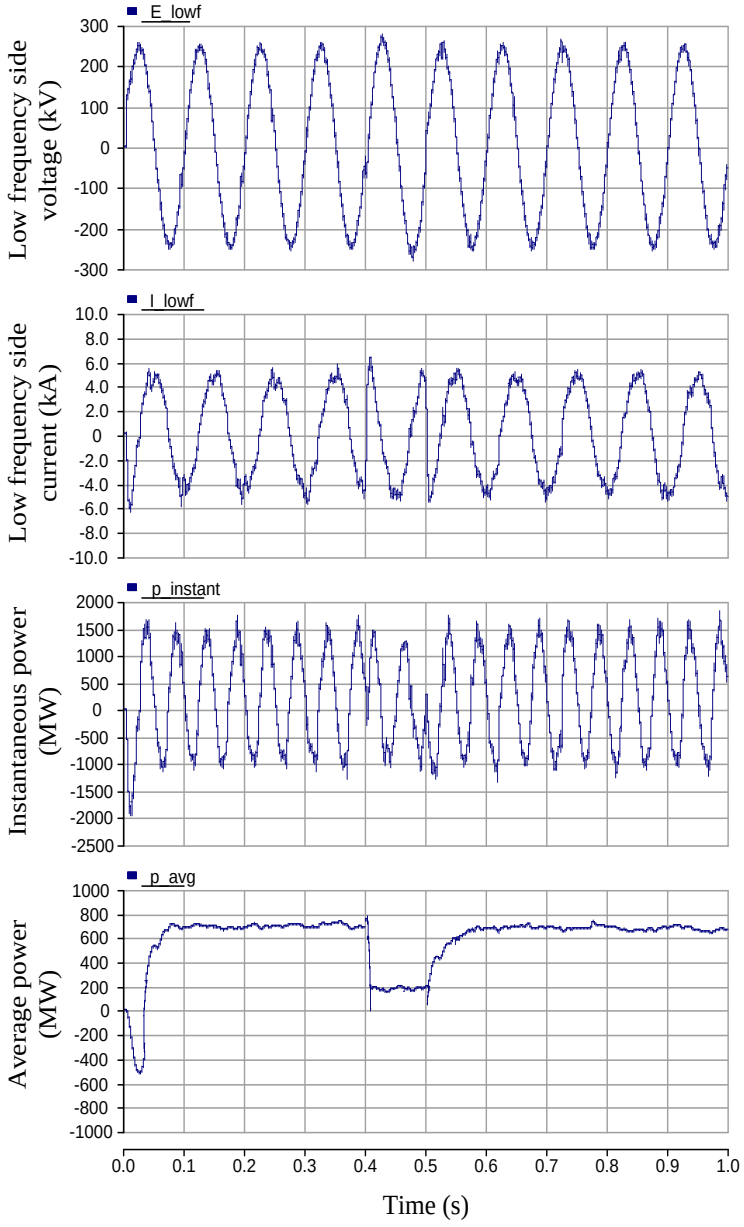

Figure 4.24 Simulation result of a sudden change of reference power.

4.4.5 Multi-terminal LFAC response

To demonstrate the validity of the proposed power control scheme for the multi-terminal LFAC application, the simulations have been carried out using the tool of the PSCAD/EMTDC simulation software. The simulation results of three-terminal two-phase LFAC system is explained in this section. Using the multi-terminal configuration as shown in Figure 4.25, the multi-terminal LFAC demonstrates the effectiveness of the proposed system and control method. The transmitting power in this system is rated at 1400 MW, and the transmission distance is 500 km.

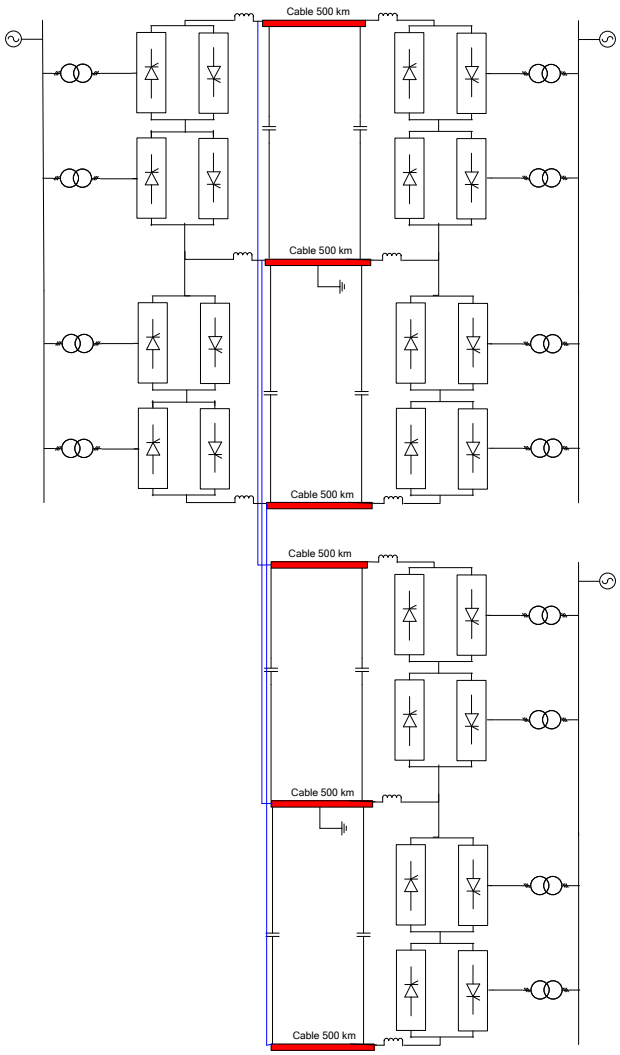

Figure 4.25 Three-terminal two-phase LFAC

The power flow patterns are shown in Figure 4.26 and the details are shown in Table 4.3. According to the power flow schedule given in Table 4.3, terminals 1, 2 and 3 are desired to inject power of 800 MW, 500 MW and -1300 MW into the grid, respectively. The minus signs show that power flow is in the opposite direction. The simulation parameters are shown in Table 4.4.

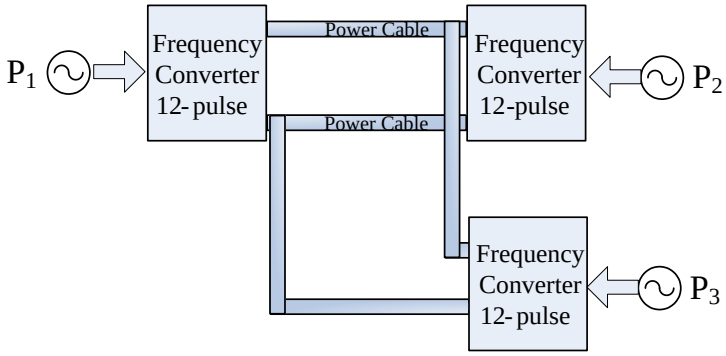

Figure 4.26 Power flow patterns for simulation

Table 4.3 : Power flow patterns

Terminal NO.	1	2	3
P*(MW)	800→-600	500→-300	-1300→900

Table 4.4 : Parameters of simulated system

LFAC System	500 kV, 10 Hz
Line frequency	60 Hz
Transmitting frequency	10 Hz
Transformer	500kV/110kV
Max. power transfer	1400 MW
Max. cable length	500 km
Number of terminals	3
Power reversal	After 0.5 second

Figure 4.27 depict the results of a simulation where the transmitting power flows from terminals 1 at 800 MW, 2 and 3 are 500 MW, and 1300 MW, respectively. After 0.5 seconds, the power direction is reversed following power references (terminal 1 at 600 MW, terminal 2 at 300 MW and terminal 3 at 900 MW). The voltage (E_lowf), current (I_lowf), and average power (p_avg) are the results on the low frequency side. As can be seen from the simulation results, the amount of power in each terminal can be transferred following the power flow patterns given in Table 4.3. Figure 4.27 (a) shows the power that flows from terminal 1 at 800 MW and in the reverse direction at 0.5 s following the power control scheme command.

Figure 4.27 (b) and (c) show the result of the power transmission on terminals 2 and 3. The results show that the amount and direction of power can follow the power flow patterns. It can be confirmed that the proposed power control for the multi-terminal LFAC using VSG control works properly.

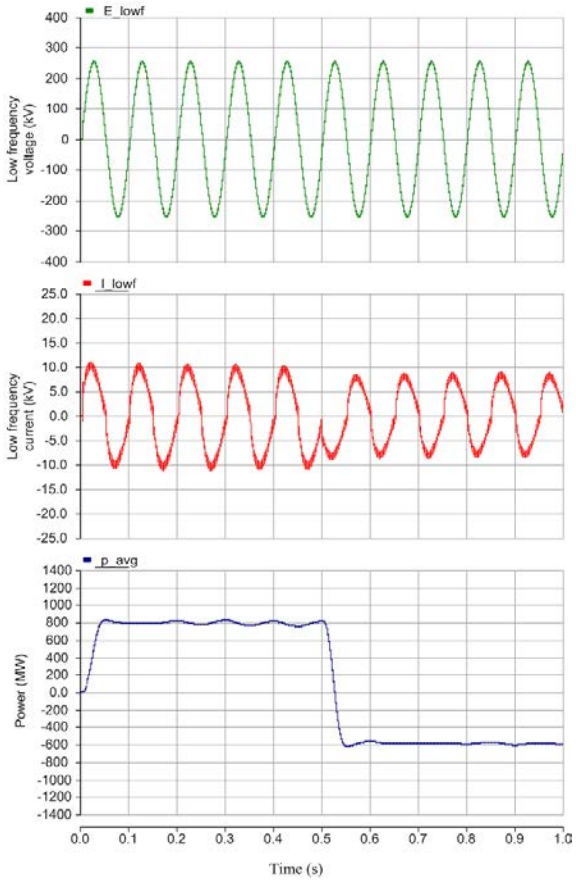

(a)

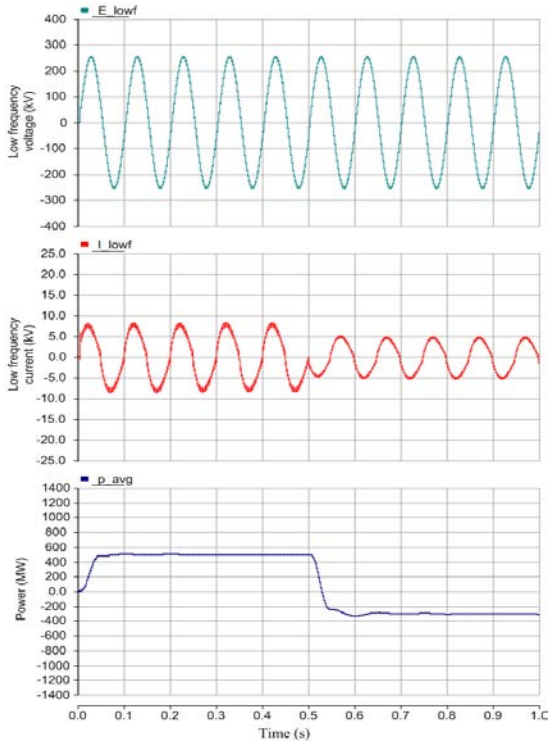

(b)

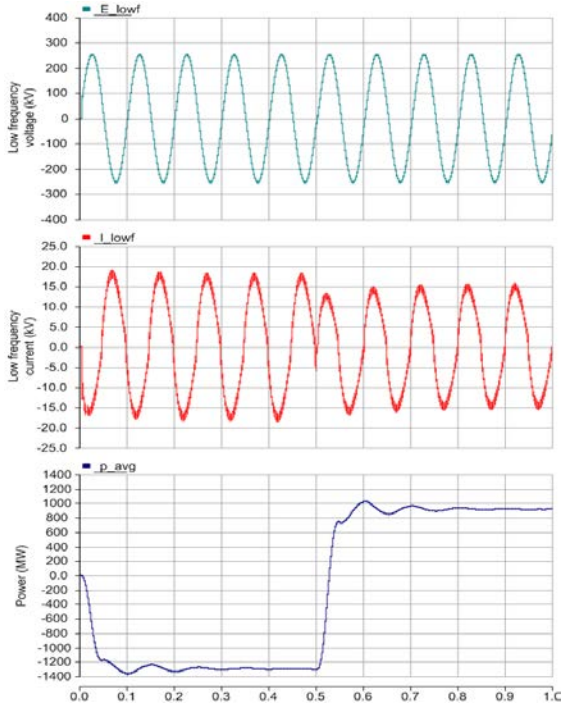

(c)

Figure 4.27 Low frequency side waveforms (voltage, current and power) on a) terminal 1, b) terminal 2 and c) terminal 3.

4.5 Summary

This chapter explains the proposed power control scheme of the multi-terminal LFAC application. Three-terminal of two-phase LFAC using cycloconverters is applied to operate with the proposed control scheme. There are three main important points to be concluded as follows:

1. The proposed power control scheme which was explained in details is feasible for synchronized frequency and regulated voltage by integrating VSG and the governor control to the control scheme.
2. Two-phase LFAC configuration was adopted to operate as multi-terminal system LFAC. The simulation results can confirm the operation of the current limiter and extinction angle control, which operated by this configuration.
3. The multi-terminal LFAC application was operated by using the proposed power control scheme to transmit power among three terminals following the reference power patterns. The simulation results verified the operation of the proposed control scheme with the given transmission system without a communication link.

This study can lead us to consider more details such as adding additional terminals to operate with the proposed control scheme and configuration.

References

[1] P. Achara and T. Ise T, “A Proposal on Low Frequency AC Transmission as a Multi-Terminal Transmission System”, Energies, Vol.9, pp.1-16, (August, 2016).

[2] S. Bozhko, G. Asher, R. Li, J. Clare, L. Yao, “Large offshore DFIG based wind farm with line-commutated HVDC connection to the main grid: Engineering studies”, IEEE Transaction on Energy Conversion, Vol.23, pp.119–127 (March, 2008).

[3] C. Mau, K. Rudion, A. Orths, P. B. Eriksen, H. Abildgaard, and Z. Styczynski, “Grid connection of offshore wind farm based DFIG with low frequency AC transmission system”, Proceeding of Power and Energy Society General Meeting, San Diego, CA., USA, pp.1-7 (22-26 July, 2012).

[4] N. Tuan, L. Min, and S. Surya, “Steady-State Analysis and Performance of Low Frequency AC Transmission Lines”, IEEE Transaction on Power Systems, Vol.31, pp.3873-3880 (September, 2016).

[5] P. G. Slade and R. K. Smith, “A comparison of the short circuit interruption performance using transverse magnetic field contacts and axial magnetic field contacts in low frequency circuits with long arcing times”, Proceeding of Discharges and Electrical Insulation in Vacuum International Symposium, Yalta, Crimea, pp. 337-340 (27 September-1 October, 2004).

[6] V. Etienne and T. O. Boon, “Multi-terminal HVDC with Thyristor Power-Flow Controller”, IEEE Transaction on Power Delivery. Vol.27, pp.1205-1212 (July, 2012).

[7] C. Hao, M. H. Johnson, and D. C. Aliprantis, “Low-Frequency AC transmission for offshore wind power”, IEEE Transactions on Power Delivery, Vol. 28, No.4, pp.2236-2244 (October, 2013).

[8] Y. Cho, G. J. Cokkinides, and A. P. Meliopoulos, “Time domain simulation of a three-phase cycloconverter for LFAC transmission systems”, IEEE Power Energy Soc. Transmission and Distribution Conference, Orlando, FL, USA, pp.1-8 (May, 2012).

[9] R. Nakagawa, T. Funaki, and K. Matsuura, “Installation and control of cycloconverter to low frequency AC power cable transmission”, Power Conversion Conference, Osaka, Japan, pp.1417-1422 (2-5 April, 2002).

[10] T. Funaki and K. Matsuura, “Feasibility of the low frequency AC transmission”, Proceeding of the Power Engineering Society, Winter Meeting, Singapore, pp.2693-2698 (23-27 January, 2000).

Chapter 5

Conclusions

For long distance bulky power transmission, the line-commutated HVDC system can handle a large amount of power on the transmission line by utilizing dc current instead of ac. However, the HVDC system is a point-to-point connection, and thus not flexible for multi-terminal connection. The low frequency ac transmission system (LFAC) is another solution for bulk power transmission. By operating the transmitting frequency lower than 50 or 60 Hz, the power transmission capacity is extended. Further, the multi-terminal application can be applied in this system without additional devices. With this benefit, the LFAC transmission system is more interesting to apply with interconnection between new wind power installations and the grid. The increase of wind power has necessitated transmission lines to be capable of handling large amounts of power as more generation is injected into the grid.

In this dissertation, we proposed the configuration and compare of LFAC transmission system. We also proposed a new power control method by Virtual Synchronous Generator Control (VSG) for synchronization of multi-terminal system. The aim of this study is to realize the LFAC performance and choose the proper configurations, i.e. number of phase and operating frequency and develop control schemes to operate in the system. The outcome of this study can be summarized as follows:

(1) Merits of LFAC transmission system are represented. The multi-terminal application is one of the obvious merits of LFAC over HVDC. The ability of line commutated converter has the natural ability to withstand short circuits, and can be used for large scale applications with the highest efficiency.

(2) Three types of LFAC configurations, which have different number of phases, are represented to compare the advantage and disadvatage in each configuration. For the single-phase configuration, the power fluctuation appears on both line frequency side. Therefore two-phase and three-phase configurations are suitable to operate in LFAC system. In order to determine the most suitable configuration, it is necessary to consider the target transmission distance.

(3) To design cable model parameter for using in LFAC transmission system, the resistance can be designed the same as in 60 Hz, and the reactance can be obtained by frequency factor ratio. The suitable transmitting frequency can be decided from the target of transmission distance and also dynamic performance of the system. It was found that the transmitting frequency of 10 Hz is the most suitable for the proposed LFAC transmission system compared with 1 Hz and 20 Hz systems considering from dynamic performance of each system.

(4) For multi-terminal application of LFAC, a new power control scheme is introduced by using virtual synchronous generator (VSG) control based on generator swing equation. The control scheme in the three-terminal LFAC system was verified through numerical simulation.

The configurations and control methods proposed in this dissertation may contribute to the large scale of power transmission system. With the presented power control strategies, the application on multi-terminal system to extend power transmission capacity can be expected.

This study can lead us to consider more extensive applications such as considering more terminals to the multi-terminal application. The operation of LFAC multi-terminal system under a fault condition is needed to analyze. The integration of LFAC with the existing transmission system is another matter to be solved.

List of Publications

Journal Publications (with review)

[1] Achara Pichetjamroen and Toshifumi Ise, "A Proposal of Low Frequency AC Transmission as a Multi-terminal Transmission System," *energies (MDPI)*, Vol. 9, Issue 9, No.687; doi:10.3390/en9090687, pp. 1-16, August, 2016.

[2] Achara Pichetjamroen and Toshifumi Ise, "Power Control of Low Frequency AC Transmission System using Cycloconverters with Virtual Synchronous Generator Control" *energies (MDPI)*, Vol. 10, Issue 1, No.34; doi:10.3390/en10010034, pp. 1-13, December, 2016.

International Conference (with review)

[1] Achara Pichetjamroen and Toshifumi Ise, "Operating Phase and Frequency Selection of Low Frequency AC Transmission System Using Cycloconverters", in Proceedings of International Power Electronics Conference (IPEC-Hiroshima), Hiroshima, Japan, 2014, pp.3687-3694.

[2] Achara Pichetjamroen and Toshifumi Ise, "A Study on Configuration of Low Frequency AC Transmission System by Using Cycloconverters", in Proceedings of the International Conference on Electrical Engineering (ICEE 2014), Jeju, Korea, 2014, pp. 1-5.

[3] Achara Pichetjamroen and Toshifumi Ise, “Power Control of Low Frequency AC Transmission System using Cycloconverters with Virtual Synchronous Generator Control”, in Proceedings of the Annual Conference of the IEEE Industrial Electronics Society (IECON 2015), Yokohama, Japan, pp. 2661-2666.

Domestic Conference (without review)

[1] Achara Pichetjamroen, Toshifumi Ise, Yushi Miura and Hiroaki Kakigano: “Two-Phase Low Frequency AC Transmission System Using Cycloconverters”, Kansai-section Joint Convention of Institutes of Electrical Engineering, No. 5G30P2-15 (2011).

[2] Achara Pichetjamroen, Yushi Miura and Toshifumi Ise: “Comparison of Multi-Phase Operation and Control in Low Frequency AC Transmission System by Using Cycloconverters”, Joint Technical Meeting on Semiconductor Power Converter and Industry Electronics Application, No. SPC-12-061 (2012)

[3] Achara Pichetjamroen, Yushi Miura and Toshifumi Ise: “Configurations and Control Schemes of a Low Frequency Power Transmission System using Cycloconverters”, Joint Technical Meeting on Power Engineering and Power Systems Engineering, No. PE-12-135, PSE-12-151 (2012).

[4] Achara Pichetjamroen and Toshifumi Ise: “Power Control of Low Frequency AC Transmission System using Cycloconverters with Virtual Synchronous Generator Control”, Annual meeting of the Institute of Electrical Engineering of Japan, No. 13N-B1,7-087 (2015).