様式６

申請先学部　基礎工学部　採択番号　No.2

平成２９年度学部学生による自主研究奨励事業研究成果報告書

ふりがな 氏　　名	ジョシ　デバラット　オムカ	学部 学科	基礎工学部 システム科	学年	3 年
ふりがな 共　同 研究者氏名		学部 学科		学年	年
					年
					年
アドバイザー教員 氏名	RAMIREZ ALPIZAR Ixchel	所属	基礎工学研究科 システム創成専攻		
研究課題名	Design and Development of Modular Robots				
研究成果の概要	研究目的、研究計画、研究方法、研究経過、研究成果等について記述すること。必要に応じて用紙を追加してもよい。（先行する研究を引用する場合は、「阪大生のためのアカデミックライティング入門」に従い、盗作剽窃にならないように引用部分を明示し文末に参考文献リストをつけること。）				

Abstract:

In this paper, a design for a modular self -reconfigurable robot system (as defined in [5]) made up of several identical robots is proposed. The design of the module, henceforth referred to as Bitbot, is intended to be simple enough to be easily repeatable and to be capable of establishing robust and fast connections with other modules.

1. Introduction and related works:

The robotic module presented in this work is inspired by two other major works in modular robotics, the M-Tran Project by AIST Japan and the SMORES-EP project by the GRASP lab, University of Pennsylvania. The body design of the Bitbot robot is inspired by the MTRAN robot and the connection system is inspired by the SMORES-EP robot. This work comes under the category of “Modular robots with a few basic elements which can be composed into complex systems used for various modes of locomotion” as identified in [4].

2. Robotic Module Design

This section describes the actual design of the Bitbot module, which can be divided into 3 major components as follows.

i) Body Design
ii) On-board sensors and actuators
iii) The connection system
    a) The EP magnet: Structure and Construction
    b) EP magnet working principle
    c) Connecting to other modules

i) Body Design

The body of the robot consists of two independently controllable halves mounted on a central connecting bar. The two halves can be rotated around their central axis over 180 degrees. The robot has two axes of symmetry. Each face of the robot is equipped with 8 holes, to serve as the mounting points for the connection system. The exterior design of the robot can be seen in Fig.1.

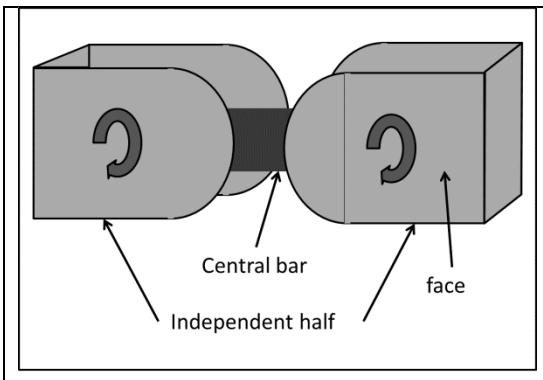

Fig.1 Exterior design of Bitbot module

ii) On-board sensors and actuators.
The Bitbot module constructed in this work uses 2 KONDO KRS-3301 ICS servo motors for actuation purposes. These motors are capable of -135^0 to 135^0 of rotation with a ±1□ tolerance of error.
The module also has an on-board 433MHz RF receiver that enables it to receive commands from the user via a microcontroller board connected to a computer.
Lastly, the Bitbot module has an on-board Arduino pro Mini (ATmega328, 16MHz, 5V) microcontroller module for logic operations.
iii) The Connection System
This project aims to explore a non-mechanical connection system requiring a small amount of energy to connect (and keep connected) two robot modules. Small-scale modular robots have tight space requirements and also require high mobility, which means that neither a power source external to the robot nor a large, power-dense battery could be implemented in the design. This means that using electro-magnets would be impossible, as they require far more power than a small battery can provide for any reasonable amount of time.
The basis of the connection system explored in this project was a device called an **EP magnet**, or an Electro-Permanent magnet. The EP magnet connection system requires no current to maintain a state (connected or unconnected) and requires only a pulse of current to switch states, i.e. it only requires a small amount of power and thus could be designed using a power source that could fit in a modular robot. Both the principle behind the EP magnet and the connection system will be described in this section.

a) The EP magnet: Structure and Construction

An EP magnet consists of two permanent magnets (one being a Neodymium (NdFeB) rare earth magnet and the other an AlNiCo magnet) wrapped in a coil of copper wire, with the magnets being capped by pole pieces of ferromagnetic material. The structure of the magnet is seen in Fig.2 [1], where *d* is the diameter of an individual magnet, *w* is the thickness of the coil of wire, *g* is the air gap between the pole piece and the target surface, *L* is the length of the magnet, and *a* x *b* is the area of contact of the pole piece.

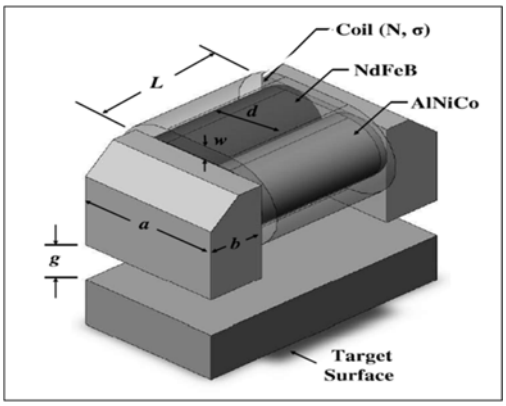

Fig.2 EP magnet structure [1]

The constructed EP magnet has two possible states.

- ON (When the EP magnet would act like a permanent bar magnet, with a N pole and an S pole, and would attract magnetic materials)
- OFF (When the EP magnet would lose most or all of its magnetic attraction capabilities)

The availability of these two states allows for the construction of the solid-state connection system used in this project.
b) EP magnet working principle
In the ON state, the magnets are polarised in the same direction, allowing the magnetic flux to leave the pole pieces and enter the target surface. The resultant magnetic force of attraction at the ends of the pole pieces is then the summation of the magnetic force due to each individual magnet. However, if the magnets are polarised in opposite directions, then the lines of magnetic flux circulate inside the EP magnet and do not enter the target surface. This describes the OFF state of the magnet. The magnetic attraction due to the magnet in this state is very low.
The EP magnet relies on the difference in the coercive force between the two permanent magnets at its centre. Coercive force, (from coercivity) refers to the ease with which a magnet can be demagnetised (and magnetised in the opposite direction, switching its polarity) by an external magnetic field. The coercivity of an AlNiCo magnet is much lower than the coercive force of an NdFeB magnet, meaning it can be demagnetised much more easily than an NdFeB magnet. To switch the polarity of the AlNiCo magnet, a specific length of copper wire is wrapped around both magnets and a powerful current is pulsed through the coil. The current through the copper wire generates a magnetic field which, if above a threshold intensity, switches the polarity of the AlNiCo magnet. The switch in polarity of the AlNiCo magnet changes the state of the EP magnet to OFF, as described above. The EP magnets in this work were constructed following the method described by Knaian [1].

c) Connecting to other modules

12 EP magnets were constructed in this study, of which 8 were used to connect two robot modules. The modules were arranged in a circular pattern on the module face (4 per face) to allow for hermaphroditic connections, as seen in Fig.5.

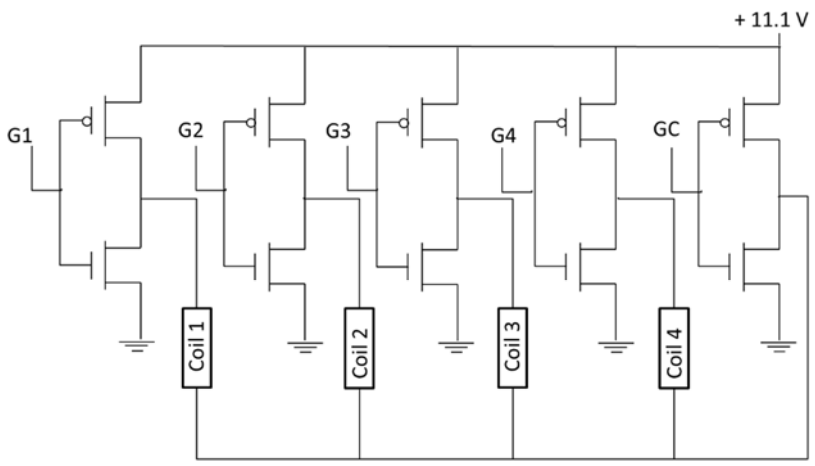

Fig.3 Switching circuitry

The EP magnets are intended to be capable of solid-state switching between ON and OFF states by the process described above. The current required for switching states is very high. (in the range of 6A). An appropriate switching system was implemented, inspired by the system used by Tosun et al. [3]The system consists of 5 CMOSs per face, with one CMOS per coil and one common CMOS. This arrangement allows for bidirectional flow of current through the coils, as is required for switching the state of the EP magnets. 5 FDS8958B Dual N and P channel MOSFETs were used to construct the circuitry. This IC is rated for 6A continuous current and 30A pulsed current. The schematic of the control circuitry can be seen in Fig.3.

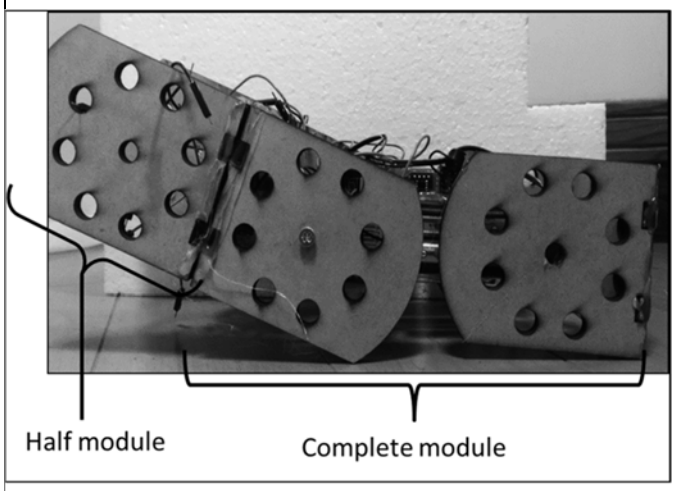

Fig.4 Complete Module lifting a Half-Module

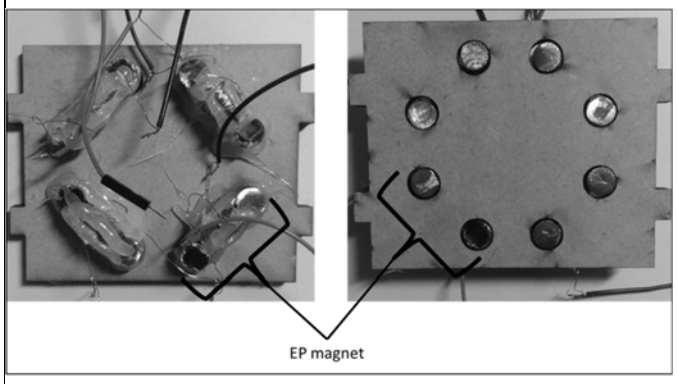

Fig.5 Module face equipped with EP magnets in (a) the inside view of the module and in (b) the outside view of the module

3. Results:

In this work, one complete module was constructed, equipped with 4 EP magnets on one face. Half of a second module was also constructed (this one also equipped with 4 EP magnets) with the intention of testing the lifting capability of the complete module. The complete module lifting half of a module is shown in Fig.4. The modules are held together by magnets, which are arranged in groups of 4 on the as seen in Fig.5. The modules can be held together in 4 possible orientations (by rotating them relative to each other in increments of 90□) due to the hermaphroditic nature of the EP magnet connector.

The control circuitry for toggling between the states of the EP magnets was constructed as shown in Fig.3, but the circuit was not capable of switching the state of the coils for unknown reasons (the IC connected to ground is not able to handle the current load).

Therefore, the states of the magnets were changed manually (by connecting the coils across battery voltage without the control circuitry) and arranged as seen in Fig.5.

4. Materials and methods

The magnetic field necessary to magnetise (switch the polarity of) the AlNiCo magnet is 55.7 kA/m (5.57×10^4 A/m). Assuming the air gap g (see Fig.2) is 0, the current I to switch the polarity of the magnet can be calculated as below.

$$I = B \times L/N \qquad -(1)$$

where I is the current in Amperes [A], B is the magnetic field in A/m, L is the length of the magnet in metres, and N is the number of turns of wire around the magnet. The length of the magnet used in this work was 15mm (1.5×10^{-2}m).

The diameter of the wire used to coil around the magnets was 0.29 mm. Accordingly; the resistance of the wire was approximated using the methods described in [1] to be 1.53 Ω. (However, the real resistance was calculated to be 2.4 Ω). Assuming 200 turns of wire, the necessary current was calculated to be 4.18 A. Since the resistance

of the coil was assumed to be between 1.53 Ω and 2.4 Ω, the necessary voltage was calculated to be between 6.39V and 10.03V. Therefore, an 11.1V high capacity Lithium polymer battery was used to obtain the necessary voltage.

The pole pieces for the magnets were made by cutting a 0.9 mm thick mild steel rod into 16mm pieces. The contact faces of the pole pieces were made level by filing them by hand.

5. Future improvements

Possible future improvements for this project are listed below.

i) The problem with the control circuitry will be diagnosed and corrected to allow the state of the EP magnets to be switched by logic operations.

ii) The assembly process of the magnets should be improved. In this work, the assembly process for the magnets was fraught with errors. Particularly the cutting and filing of the pole pieces and the coiling of the wire around the magnets. More efficient and less error-prone methods will be explored.

iii) A single microcontroller board was used in the robot for logic operations. However, the board used does not have enough output pins to control all of the functions of the robot. Each module face would be equipped with 4 magnets, meaning each face would require 5 control pins. This means a total of 5 x 6 = 30 control pins for the magnets alone. A simpler control system and a board with more output pins are possible solutions.

iv) A communication protocol between connected modules will be explored. The magnet pole pieces themselves can be used as terminals for communication between modules, as described by Gilpin et al. [6]

References:

[1] Knaian, A. Electropermanent Magnetic Connectors and Actuators: Devices and Their Application in Programmable Matter (Doctoral dissertation) Retrieved from: http://cba.mit.edu/docs/theses/10.06. knaian. pdf

[2] Murata, S. ,Yoshida, S. , Kamimura, A. , Kurokawa, H. , Tomita, K., , & Kokaji, S. M-TRAN: Self-Reconfigurable Modular Robotic System. *IEEE/ASME TRANSACTIONS ON MECHATRONICS*, VOL. 7, NO. 4, DECEMBER 2002 431-441

[3] Tosun, T., Davey, J., Liu, C., & Yim, M. Design and Characterization of the EP-Face Connector *Intelligent Robots and Systems (IROS), 2016 IEEE/RSJ International Conference on*

[4] Gorbenko, A. Planning for Modular Robots Saarbrücken: Lambert, 2012. Print.

[5] Siciliano, Khatib, Handbook of Robotics, Berlin Heidelberg: Springer 2016. Print.

[6] Gilpin, K. Knaian, A, Rus, D. Robot Pebbles: One-Centimeter Modules for Programmable Matter Through Self-Disassembly Retrieved from : http://cba.mit.edu/docs/papers/10.05.knaian.ICRA.pdf