Osaka University Knowledge Archive

Title	Periodic automorphisms of surfaces and cobordism
Author(s)	Hirose, Susumu
Citation	Osaka Journal of Mathematics. 1996, 33(3), p. 709-728
Version Type	VoR
URL	https://doi.org/10.18910/7984
rights	
Note	

Osaka University Knowledge Archive : OUKA

https://ir.library.osaka-u.ac.jp/

Osaka University

Hirose, S.
Osaka J. Math.
33 (1996), 709–728

PERIODIC AUTOMORPHISMS OF SURFACES AND COBORDISM

SUSUMU HIROSE

(Received May 15, 1995)

0. Introduction

In this paper, we work in the differential category. Unless otherwise stated, a surface is an oriented closed, possibly disconnected, surface, and an automorphism is an orientation preserving self-homeomorphism. An automorphism of a surface (F,f) is said to be *null-cobordant* if there is a compact oriented 3-manifold M equipped with an automorphism $(M,\hat{f})$, such that $\partial(M,\hat{f})=(\partial M,\hat{f}|_{\partial M})$ is equal to (F,f). We call this 3-manifold M the *null-cobordism* for (F,f). Two automorphisms of surfaces (F_1,f_1) and (F_2,f_2) are *cobordant* if $(F_1,f_1)\quad(-F_2,f_2)$ is null-cobordant. The cobordism classes form a group Δ_{2+} whose group law is induced by disjoint sum $\amalg$. Bonahon [B], Edmonds and Eving [EE] proved that Δ_{2+} is isomorphic to $\boldsymbol{Z}^{\boldsymbol{Z}}\oplus(\boldsymbol{Z}/2\boldsymbol{Z})^{\boldsymbol{Z}}$. Bonahon asked the following question in his paper [B;section 9]

Given an automorphism of a surface (for instance presented as a product of Dehn twists), decide whether it is null-cobordant or not.

For the sake of characterizing null-cobordant automorphisms, we want to know, for arbitrary null-cobordant automorphism, what kind of 3-manifold can be constructed as its null-cobordism, and we want to get an explicitly constructed family of 3-manifolds in which, for any null-cobordant automorphism, we can find a null-cobordism of this automorphism. For example, if an automorphism of a 2-torus is null-cobordant then it bounds an automorphism of a solid torus ([B]). In this paper, we show that the same kind of things are true for other surfaces:

Theorem 1. *If an automorphism over a surface is null-cobordant, then this automorphism bounds an automorphism of a* 3*-manifold obtained by glueing* 1*-handles over disjoint union of orientable I-bundles over closed, possibly non orientable, surfaces, handlebodies, and trivalent manifolds (defined in section* 3*).*

Contents are as follows: in section 1, we review some results and terminologies in [B]. In section 2, we review some results on periodic maps, show that any periodic map *compresses* to a *trivalent map*, and introduce a graph which corresponds to a null-cobordant trivalent map. In section 3, we introduce a *trivalent manifold*

which is a null-cobordism of a null-cobordant trivalent map, and construct hyperbolic structures on these manifolds. In section 4, we give a proof of Theorem 1. In section 5, we apply trivalent maps and trivalent graphs for another problem. Let $\Delta^P_{2+}(n)$ denote the group of periodic cobordism classes of automorphisms (F,f) with period n. Bonahon [B; Proposition 8.3] proved that $\Delta^P_{2+}(n) \cong \boldsymbol{Z}^{[(n-1)/2]}$ (here, [ ] means "integer part"). We show this fact explicitly with giving the basis of this abelian group in terms of trivalent maps.

ACKNOWLEDGEMENT. The author wishes to express his gratitude for Professor Koich Yano, for his advice and encouragement. This research was partially supported by Fellowships of the Japan Society for the Promotion of Science for Japanese Junior Scientists.

1. Preliminaries

In this section, we review some results and terminologies in [B]. The following was shown:

Lemma [B; Lemma 5.2]. *If* (F,f) is null-cobordant, it bounds an automorphism $(M,\hat{f})$ *with* M *irreducible.*

For an irreducible 3-manifold M, its boundary may be compressible. Hence, we want to extract compressing discs of boundaries from this 3-manifold. A terminology was defined:

DEFINITION. A 3-manifold V is a *compression body* for a surface F if V is an irreducible 3-manifold formed from $F \times I$ by adding 2- and 3-handles to $F \times \{1\}$, i.e. V is obtained by adding 2-handles along thin regular neighborhoods of disjoint simple closed curves in $F \times \{1\}$ and capping off any 2-sphere boundary components this creates with 3-balls. There exists a partition $\partial V = \partial_e V \amalg \partial_i V$, where $\partial_e V = F \times \{0\}$, $\partial_i V = \partial V - \partial_e V$. We call $\partial_e V$ the *exterior boundary* and $\partial_i V$ the *interior boundary.*

We construct compression bodies for ∂M embedded in M. There exist a great variety of compression bodies, but there is a "maximal" one. Namely,Bonahon showed:

Theorem [B; Theorem 2.1]. *Let* M *be an irreducible, three manifold. There exsts a compression body* $V \subset M$ *for* ∂M*,unique up to isotopy, such that* $\overline{M-V}$ *is* ∂*-irreducible* (*and irreducible*).

We call the compression body V given in this Theorem the *characteristic*

compression body of M. For an irreducible and ∂-irreducible manifold M', Johannson [Jo], Jaco and Shalen [JS] showed:

Theorem [Jo], [JS]. *By a family of essential tori and annuli properly embedded in M', which are not parallel pair by pair. M' is decomposed into two factors,*
1) *a Seifert factor: this factor consists of Seifert fibered manifolds and I-bundles over surfaces*
2) *a simple factor: this factor is atoroidal and anannular, but does not have Seifert fiber structure or I-bundle structure and this decomposition is unique up to isotopy.*

Hence, an irreducible 3-manifold M is decomposed into three factors, a characteristic compression body, a Seifert part, and a simple factor, unique up to isotopy. Bonahon deeply investigated this decomposition, and showed:

Proposition A ([B;Proposition 5.1]). *If (F,f) is null-cobordant, it bounds an automorphism $(M^3,\hat{f})$ where M split into three pieces V, M_1 and M_P, preserved by $\hat{f}$, such that:*
(1) *V is a compression body for ∂M and $\overline{M-V}=M_I\cup M_P$.*
(2) *M_I is an orientable I-bundle over a closed, possibly non-orientable, surface.*
(3) *The restriction of $\hat{f}$ to M_P is periodic.*

In this paper, we study M_P, that is, for a given periodic null-cobordant automorphism (F_P,f_P), we construct, explicitly, a 3-manifold $\hat{M}$ such that there is a periodic automorphism $(\hat{M},\hat{f})$ whose restriction to the boundary $(\partial\hat{M},\hat{f}|_{\partial\hat{M}})$ is (F_P,f_P). In section 3, we will show that this $\hat{M}$ can be decomposed into hyperbolic 3-manifolds by essential tori. Hence, Theorem 1 is restated as follows:

Theorem 1′. *If (F,f)* is null-cobordant, it bounds an automorphism of an irreducible 3-manifold whose Seifert factor consists of an orientable I-bundle over a surface and whose simple factor is a trivalent manifold (defined in section 3).

2. Periodic automorphisms

An automorphism of a surface (F,f) is *periodic*, if there is positive integers n such that $f^n=\mathrm{id}_F$. The *period of* (F,f) is the smallest positive integer which satisfies the above condition. Let n be the period of (F,f). Denote $Fix_+f=\{x\in F|$ there exists a positive integer $m<n$ such that $f^m(x)=x\}$. For any periodic map (F,f), its orbit space F/f is defined by identifying x in F with $f(x)$, let $\pi_f:F\to F/f$ be the quotient map. For any component F_i of F, the *period of f in F_i* is the period of the map $f|_{\hat{F}_i}$, where $\hat{F}_i=\pi_f^{-1}(\pi_f(F_i))$. If all the components of F have the same period n, then (F,f) is the periodic map with the *total period n*. For any periodic map (F,f) with the total period n, denote $\pi_f(Fix_+f)$ by S_f and called

singular set of F/f and its elements are called *singular points*. Let O_i be any connected component of F/f and its elements are called *singular points*. Let O_i be any connected component of $F/f-S_f$, x_i be any point of O_i and $\tilde{x}_i$ be any point in F such that $\pi_f(\tilde{x}_i)=x_i$. Define the homomorphism R_f from $\bigoplus_i \pi_1(O_i,x_i)$ to $\boldsymbol{Z}_n$ as follows: Let λ be an element of $\pi_1(O_i,x_i)$, and let l be a loop representing λ. Let $\tilde{l}$ be a path which begins at $\tilde{x}_i$ and $\pi_f(\tilde{l})=l$, where $\pi_f|_{\tilde{l}}$ is injective. There exists a positive integer r smaller than or equal to n such that $f^r(\tilde{x}_i)$ is the terminal point of $\tilde{l}$. We define $R_f(\lambda)=r$. We note that this definition does not depend on the choice of the base points $\tilde{x}_i$ and the loops l and their lifts $\tilde{l}$ on F. Since $\boldsymbol{Z}_n$ is abelian, we can naturally define a homomorphism ρ_f from $H_1(F/f-S_f;\boldsymbol{Z})$ to $\boldsymbol{Z}_n$ induced by R_f. For any point s_j of S_f, let D_i be a disk in F/f, which include s in its interior and is sufficiently small such that no other points s_j $(i\neq j)$ is included in D_i. Define $I_f(s_i)=\rho_f([\partial D_i])$. We note that $I_f(s_i)$ is independent of the choice of D_i.

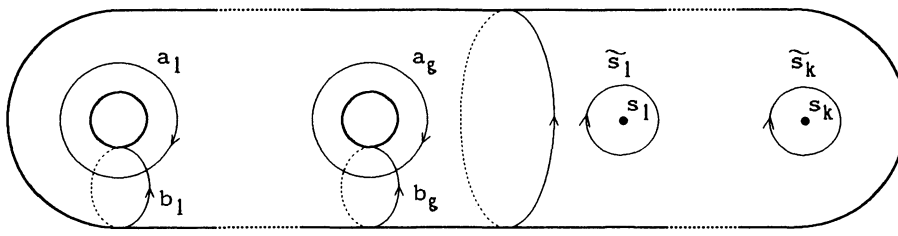

Fig. 1.

Let Σ_g be a connected surface of genus g, S a set of finite points in Σ_g. Denote by $\mathscr{P}_n(\Sigma_g,S)$ the set of the periodic map (F,f) with total period n such that $S_f=S$. A periodic map (F,f) with total period n is *(n,g,k)-periodic map*, if (F,f) is the element of $\mathscr{P}_n(\Sigma_g,S)$ where the number of the points of S is k. Two elements (F_1,f_1) and (F_2,f_2) of $\mathscr{P}_n(\Sigma_g,S)$ are equivalent if there exists an orientation preserving diffeomorphism $h:F_1\to F_2$ such that $h\circ f_1=f_2\circ h$. Denote the set of equivalent classes in $\mathscr{P}_n(\Sigma_g,S)$ by $P_n(\Sigma_g,S)$. We take a model for Σ_g in the 3-dimensional Euclidean space as shown in Figure 1. Let $Hom(H_1(\Sigma_g-S),\boldsymbol{Z}_n)^*$ be the set of homomorphisms ω from $H_1(\Sigma_g-S)$ to $\boldsymbol{Z}_n$ such that $\omega(\tilde{s}_i)\neq 0$ for every $\tilde{s}_i$. We say that two elements ω_1 and ω_2 of $Hom(H_1(\Sigma_g-S),\boldsymbol{Z}_n)^*$ are *$\mathscr{A}$-equivalent*, if there exists a homeomorphism h on (Σ_g,S) such that $\omega_1\circ h_*=\omega_2$ where h_* is the automorphism of $H_1(\Sigma_g-S)$ induced by $h|_{\Sigma_g-S}$. We denote by $Q_n(\Sigma_g,S)$ the set of the $\mathscr{A}$-equivalent class of $Hom(H_1(\Sigma_g-S),\boldsymbol{Z}_n)^*$. Yokoyama [Y] showed the following theorem.

Theorem B

I) *The map that associates with each* (F,f) in $P_n(\Sigma_g,S)$ *the homomorphism* $\rho_f: H_1(\Sigma_g - S) \to \boldsymbol{Z}_n$ *defines a one-to-one correspondence between* $P_n(\Sigma_g,S)$ *and* $Q_n(\Sigma_g,S)$.

II) *Any element of* $Q_n(\Sigma_g,S)$ *can be represented by homomorphism* ρ: $H_1(\Sigma_g - S) \to \boldsymbol{Z}_n$ *such that* $\rho(a_1)=m$, $\rho(b_1)=0$, $\rho(a_i)=\rho(b_i)=0$ $(i \geq 2)$ *and, for* $\theta_j=\rho(\tilde{s}_j)$, $1 \leq \theta_i \leq \theta_2 \leq \cdots \leq \theta_k < n$, $\theta_1 + \cdots + \theta_k \equiv 0 \pmod{n}$.

Corollary 2 [B; Lemma 8.2]. *If* $S_f = \phi$, *then* (F,f) *bounds a periodic automorphism of a disjoint union of handlebodies.*

Proof. Following from Theorem B, we can see that such a map is a composition of a transitive cyclic permutation of components of F and a rotation around the axis as in Figure 2. Since this map bounds an automorphism of a disjoint union of handlebodies, we get the result.

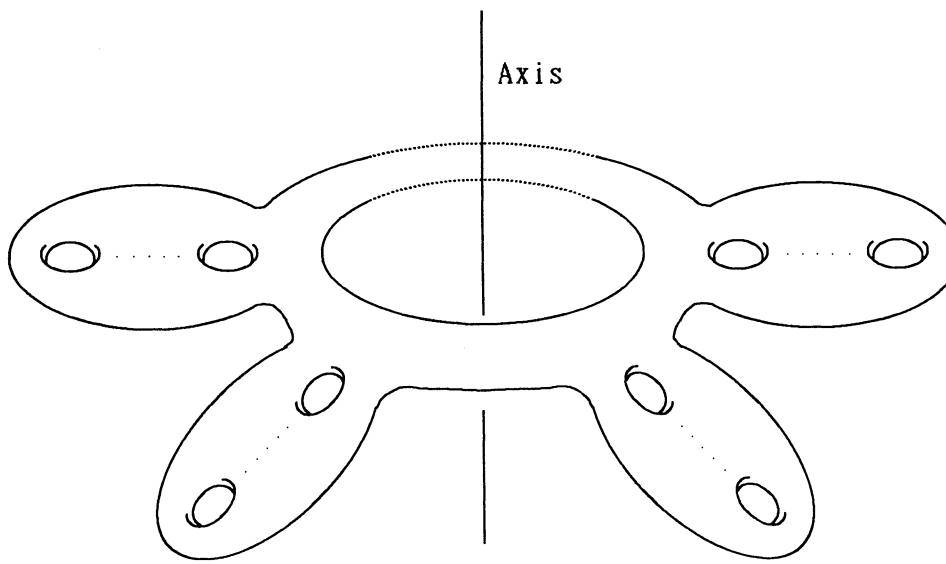

Fig. 2.

DEFINITION. A periodic map (F,f) is *trivalent map*, if it is a disjoint union of $(n,0,3)$-periodic maps, i.e. the orbit space F/f is a disjoint union of 2-spheres and each components have three singular points.

The *genus* of a trivalent map (F,f) is the sum of genera of all components of F. By Theorem B, there exists a unique element of $P_n(S^2,\{x_1,x_2,x_3\})$ represented by a trivalent map (F,f) under the condition that $\theta_i = I_f(x_i)$ $(i=1,2,3)$. Represent this map (F,f) by $\{\theta_1,\theta_2,\theta_3;n\}$. This map $\{\theta_1,\theta_2,\theta_3;n\}$ is independent of the

choice of the order of $\theta_1,\theta_2,\theta_3$, as an element of $P_n(S^2,\{x_1,x_2,x_3\})$, we may assume $0<\theta_1\leq\theta_2\leq\theta_3<n$. Define $n_i=g.c.d.(\theta_i,n)$ $(i=1,2,3)$, $N=g.c.d.(n_1,n_2,n_3)$. Then N is the number of the components of F. The genus G of the trivalent map $\{\theta_1,\theta_2,\theta_3;n\}$ is given by the following formula

$$G=N+\{n-(n_1+n_2+n_3)\}/2$$

Here, we will give some examples of trivalent maps.

EXAMPLE. Using the above formula, we classify all trivalent maps on surfaces with genera 0,1,2 up to equivalence.

0) *Trivalent maps on 2-sphere.*

There is no trivalent map on disjoint union of 2-spheres.

1) *Trivalent maps on 2-tori.*

There are 6 types of trivalent maps on a 2-torus; (1) $\{1,1,1;3\}$, (1′) $\{2,2,2;3\}$, (2) $\{1,1,2;4\}$, (2′) $\{2,3,3;4\}$, (3) $\{1,2,3;6\}$, (3′) $\{3,4,5;6\}$. Here, (1′) is the same as (1) but the orientation reversed, and (2′), (3′) are also. These maps are represented by 2×2 matrices; (1) $\begin{pmatrix}0 & -1\\ 1 & -1\end{pmatrix}$ (2) $\begin{pmatrix}0 & -1\\ 1 & 0\end{pmatrix}$ (3) $\begin{pmatrix}1 & -1\\ 1 & 0\end{pmatrix}$. This is proved as follows: For these maps, $N=1$ and $\{n-(n_1+n_2+n_3)\}/2=0$ in the above formula for G. Therefore $n=n_1+n_2+n_3$. Divide this equation by n and replace n/n_i by m_i, then $1/m_1+1/m_2+1/m_3=0$. To satisfy this condition, (m_1,m_2,m_3) is one of (3,3,3), (2,3,6),(2,4,4). By the definition of N, n must be $l.c.m.(m_1,m_2,m_3)$. For each (m_1,m_2,m_3), we can reconstruct trivalent maps and get the result. On the disjoint union of 2-tori, trivalent maps whose orbit spaces are connected are constructed by combining the trivalent maps on one 2-torus with the cyclic transitive permutation of the components. For example there are 6 types of trivalent maps on a disjoint union of two 2-tori; (1) $\{2,2,2;6\}$, (1′) $\{4,4,4;6\}$, (2) $\{2,2,4;8\}$, (2′) $\{4,6,6;8\}$, (3) $\{2,4,6;12\}$, (3′) $\{6,8,10;12\}$.

2) *Trivalent maps on a genus 2 closed surface* Σ_2.

Trivalent map on Σ_2 is one of the following; (1) $\{1,2,2;5\}$, (1′) $\{3,3,4;5\}$, (2) $\{1,1,3;5\}$, (2′) $\{2,4,4;5\}$, (3) $\{2,5,5;6\}$, (3′) $\{1,1,4;6\}$, (4) $\{4,5,7;8\}$, (4′) $\{1,3,4;8\}$, (5) $\{1,4,5;10\}$, (5′) $\{5,6,9;10\}$, (6) $\{2,3,5;10\}$, (6′) $\{5,7,8;10\}$. This is proved by the two facts, (a) if a positive prime integer n is a period of a periodic map on a connected surface of genus g $(g\geq 2)$, then $n\leq 2g+1$ (it is a corollary of Riemann-Hurwitz Relation (see [FK])), (b) the greatest number of the period of the periodic map over a connected surface of genus g $(g\geq 2)$ is $2(2g+1)$ (see [H; Theorem 6]).

DEFINITION. An automorphism of surface (F_1,f_1) *compresses* to (F_2,f_2), if there exists an automorphism of a compression body $(V,\hat{f})$ such that $(F_1,f_1)=(\partial_e V,\hat{f}|_{\partial_e V})$, $(F_2,f_2)=(-\partial_i V,\hat{f}|_{\partial_i V})$.

The following Theorem shows that trivalent maps are the essential parts of periodic maps.

Theorem 3. *Any periodic map compresses to a trivalent map.*

Proof. Let (F,f) be a periodic automorphism. For a simple closed curve l in $F/f-S_f$, let N be a thin regular neighborhood of l in $F/f-S_f$, and let $\coprod_j N_j=\pi_f^{-1}(N)$ be the decomposition into connected components. Cut the surface F along $\pi_f^{-1}(l)$, and denote $F^c=F-\coprod_j N_j$, then $(F^c,f|_{F^c})$ is a periodic map. A restriction of this map to the boundary, $(\partial F^c,f|_{\partial F^c})$, bounds a periodic map $((\coprod D_j)\coprod(\coprod D'_j),g)$, where $\partial D_j\coprod\partial D'_j=\partial N_j$ and $g|D_j$, $g|D'_j$ are rotations. We denote by s_j, s'_j the centers of these rotations. Let $\tilde{F}=F^c\cup_{\partial F^c}((\coprod D_j)\coprod(\coprod D'_j))$ where ∂F^c and $(\coprod\partial D_j)\coprod(\coprod\partial D'_j)$ are identified naturally. On this surface, we can obtain a periodic map $(\tilde{F},\tilde{f})$ such that $(F^c,\tilde{f}|F^c)=(F^c,f|F^c)$ and $((\coprod D_j)\coprod(\coprod D'_j),\tilde{f}|_{(\coprod D_j)\coprod(\coprod D'_j)})=((\coprod D_j)\coprod(\coprod D'_j),g)$. We say that $(\tilde{F},\tilde{f})$ is obtained from (F,f) by an *equivariant 2-surgery* along l. If $\rho_f(l)\neq 0$, then $S_{\tilde{f}}=S_f\cup\{s_j,s'_j\}$ and $I_{\tilde{f}}(s_j)=-I_{\tilde{f}}(s'_j)=\pm\rho_f(l)$. If $\rho_f(l)=0$ then $S_{\tilde{f}}=S_f$.

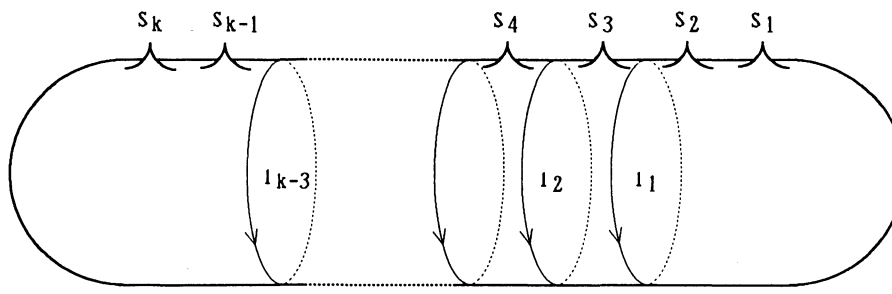

Fig. 3.

We can divide automorphism into parts which have total period n and n's are different each other, and discuss each parts. Therefore, we assume the periodic map (F,f) has the total period n. For each component O of F/f, let l be a simple closed curve as in Figure 1. Perform an equivariant 2-surgery along l and obtain a periodic automorphism (F',f'). This periodic automorphism (F',f') is a disjoint union of $(n,0,k)$-periodic maps and $(n,g,0)$-periodic maps. Thus, by Corollary 2, (F,f) compresses to a disjoint union of $(n,0,k)$-periodic maps. For an $(n,0,k)$-periodic map (F',f'), perform equivariant 2-surgeries along mutually disjoint simple closed curves $l_1,\cdots,l_{k-3}$ as in Figure 3 and obtain a periodic map (F'',f'')

which is a disjoint union of $(n,0,3)$- and $(n,0,2)$-periodic maps. Remark that, for each component of F''/f'', the number of singular points is either two or three, depending on the value $\rho_{f'}(l_i)$. An $(n,0,2)$-periodic map is a composition of a transitive cyclic permutation of components and rotations of 2-spheres whose axes are the lines through north poles to south poles. These maps bound periodic maps on 3-balls. This shows that an $(n,0,k)$-periodic map compresses to a disjoint union of $(n,0,3)$-periodic maps,i.e. trivalent maps, and finishes the proof.

A periodic map (F,f) is *periodic null-cobordant*, if there exists a periodic map $(M,\hat{f})$ of a 3-manifold M such that $\partial(M,\hat{f})=(F,f)$ and periodic maps (F_1,f_1), (F_2,f_2) are *periodic cobordant*, if $(F_1,f_1)\amalg(-F_2,f_2)$ is periodic null-cobordant. Remark that, for any periodic null-cobordant map (F,f), periods of f in each component of F may be different. Let $(M,\hat{f})$ be the null-conbordism of (F,f), for each component M_i of M, as is easy to see, the periods of f in each component of $F\cap\partial M_i$ are the same. Hence, for the sake of our investigation, it is sufficient to work on periodic maps with some total period. For any point x in F, let m be the smallest positive integer with $f^m(x)=x$. Then there exists an element ρ of $\boldsymbol{Q}/\boldsymbol{Z}$ such that f^m is locally conjugate to a rotation of angle $2\pi\rho$ around x where the conjugation is given by the orientation preserving local automorphism. Denote this ρ by $r(f,x)$.

Bonahon [B; Proposition 8.1] showed the following proposition.

Proposition C. *If (F,f) is a periodic map, (F,f) is periodic null-cobordant if and only if Fix_+f admits a partition into pairs $\{x_i,x_i'\}$ such that:*

(1) $r(f,x_i)+r(f,x_i')=0$.

(2) *For every i, $f(\{x_i,x_i'\})=\{x_j,x_j'\}$ for some j.*

The following lemma shows some relationship between $r(f,x)$ and $I_f(\pi_f(x))$:

Lemma 4. *Let (F,f) be a periodic map with the total period n. For two points x and x' in Fix_+f, $r(f,x)+r(f,x')=0$ if and only if $I_f(\pi_f(x))+I_f(\pi_f(x'))=0$.*

Proof. If the total period n is fixed, $r(f,x)$ and $I_f(\pi_f(x))$ are determined by each other, and this does not depend on the map f. Hence, it suffices to show the claim for $(n,0,2)$-periodic maps, in which case the statement is trivial.

We can restate Proposition C in terms of $I_f(*)$:

Lemma 5. *A periodic map (F,f) with the total period n is periodic null-cobordant if and only if S_f admits a partition into pairs $\{s_i,s_i'\}$ such that $I_f(s_i)+I_f(s_i')=0$.*

Proof. First, we see the sufficiency. Let $\{x_i,x_i'\}$ be the lift of $\{s_i,s_i'\}$,

$r(f,x_i)+r(f,x_i')=0$ by Lemma 4. By the definition of $r(f,*)$, $r(f,x)=r(f,f(x))$ for all x in Fix_+f, therefore $r(f,f(x_i))+r(f,f(x_i'))=0$. We can see that a partition into pairs of S_f naturally induces a partition into pairs of Fix_+f which satisfies the condition mentioned in Proposition C.

Next, we see the necessity. Let $Fix_{++}f=\{x\in Fix_+f \mid r(f,x)\neq 1/2\}$. Then this set admits a partition into pairs $\{x_i,x_i'\}$ following from Proposition C. The subset $S_{f+}=\pi_f(Fix_{++}f)$ of S_f admits a partition into pairs $\{s_i,s_i'\}$ such that $I_f(s_i)+I_f(s_i')=0$ following from Lemma 4. For each element s of S_f-S_{f+}, since any lift x of s satisfies $r(f,x)=1/2$, $I_f(f,x)$ is equal to $n/2\in \boldsymbol{Z}_n$. For each element s_i of S_{f+}, let D_i be a small 2-disk in F/f around s_i such that they do not intersect each other. By the definition of $I_f(*)$, we can see $\rho_f(\sum_i[\partial D_i])=0$. For each element $s_j'\in S_f-S_{f+}$, let D_j' be a small 2-disk in F/f around s_j' as sbove. Then $\sum_j[\partial D_j']=-\sum_i[\partial D_i]$ and it follows that $\rho_f(\sum_j[\partial D_j'])=0$. By the definition of $I_f(*)$, $\rho_f(\sum_j[\partial D_j'])=\sum_j I_f(s_j')$. Since $I_f(s_j')=n/2$, S_f-S_{f+} consists of even number of points. The set S_f-S_{f+} can admit a partition into pairs $\{s_i,s_i'\}$ such that $I_f(s_i)+I_f(s_i')=0$. Hence, S_f admits a partition into pairs which we need.

DEFINITION. For any periodic null-cobordant map (F,f) with total period n, define the set

$$P_f=\left\{\{\{s_i,s_i'\}\}_i \;\middle|\; \begin{array}{r} \bigcup_i\{s_i,s_i'\}=S_f,\ \{s_i,s_i'\}\cap\{s_j,s_j\}=\phi \text{ for any } i\neq j, \\ \text{and } I_f(s_i)+I_f(s_i')=0 \end{array}\right\}$$

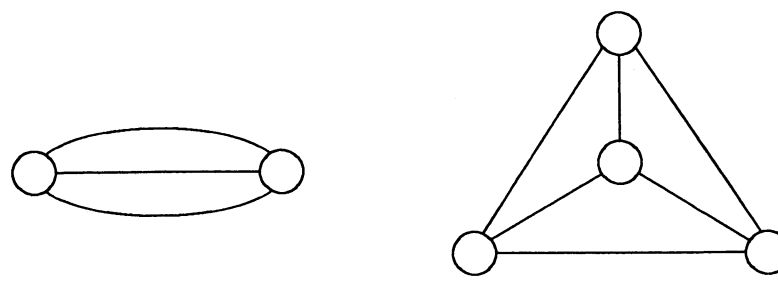

(i) (ii)

Fig. 4.

A *graph* Γ is a 1-dimensional finite CW-complex. A *vertex* of Γ is a 0-cell of Γ, an *edge* of Γ is an 1-cell of Γ. We call a graph Γ *trivalent* if, for each vertex, the number of edges which terminate at this vertex is three (here, remark that edges are not oriented). Clearly, the number of vertices of a trivalent graph

is even. A graph Γ' is a *subgraph* of a graph Γ, if Γ' is the subcomplex of Γ. In Figure 4, we give two simple examples of trivalent graphs, which play central roles in this paper. A subgraph C of Γ is *circuit* over Γ if C is homeomorphic to S^1, and if the number of edges of C is l we call C a *l-circuit*. If the number of components of Γ is k and there exists an edge $e_1,\cdots,e_m$ such that $\Gamma-e_1\cup\cdots\cup e_m$ have $k+1$ connected components, then Γ is said to be *m-splittable*, and the set $\{e_1,\cdots,e_m\}$ is called a *splitting edge set*. Let (F,f) be a periodic null-cobordant trivalent map, and $p\in P_f$. We can make a trivalent graph $\Gamma_{f,p}$ which corresponds to this map (F,f) and an element p of P_f, by identifying each component of F/f with the vertex of $\Gamma_{f,p}$ and each pair $\{s_i,s_i'\}\in p$ with the edge of $\Gamma_{f,p}$ which connect two vertices identified with two components of F/f including s_i and s_i'. Give an arbitrary orientation on each edge, if a terminal vertex of an oriented edge e corresponds to the component of F/f including s_i', then give a weight $I_f(s_i')\in \boldsymbol{Z}_n$ on this oriented edge. The weights on the graph $\Gamma_{f,p}$ depend on the orientation of edges, but we do not tell one from the others, that is, we regard the graphs in Figure 5 as the same weighted graphs.

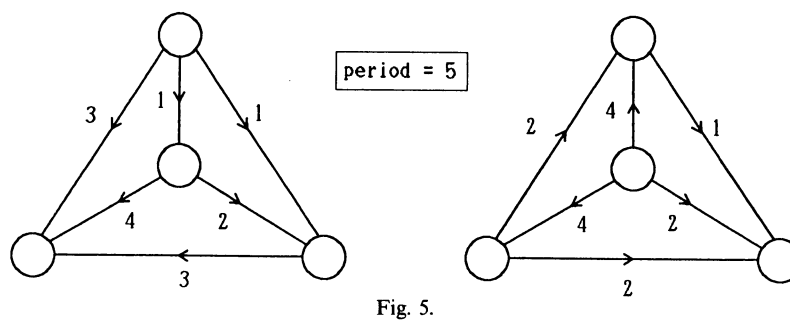

Fig. 5.

REMARK. Let $\Gamma_{f,p}$ be connected, $\{e_1,\cdots,e_m\}$ be splitting edge set, and Γ_1, Γ_2 be the components of $\Gamma_{f,p}-e_1\cup\cdots\cup e_m$. Give an orientation of each e_i such that whose terminal vertex is in Γ_2, then the summation of weights given to $e_1,\cdots,e_m$ is 0 (we can prove this fact by the induction of the number of vertices). From this fact, we can see that if $\Gamma_{f,p}$ has two vertices then $\Gamma_{f,p}$ is as in Figure 4(i).

3. Trivalent manifolds and their geometry

Regard S^3 as a 1-point compactification of $\boldsymbol{R}^3$. Let $\boldsymbol{R}^3$ be the Euclidean 3-space. Let Γ be the set which consists of vertices and edges of a tetrahedra in $\boldsymbol{R}^3\subset S^3$. This CW-complex Γ is the trivalent graph as in Figure 4(ii). Let $T=S^3$-regular neighborhood of vertices of Γ, and $(T,\hat{\Gamma})=(T,T\cap\Gamma)$. $\hat{\Gamma}$ is four arcs properly embedded in T. Let $\{(T_i,\hat{\Gamma}_i)\}_i$ be the arbitrary number of copies of $(T,\hat{\Gamma})$, $\{\{S_k,S_k'\}\}_k$ be the pairing of connected components of $\bigcup_i \partial T_i$ such that

$\{S_k, S'_k\} \cap \{S_l, S'_l\} = \phi$ for any $k \neq l$ and there may be some components of $\bigcup_i \partial T_i$ which are not included in $\bigcup_k (S_k, S'_k)$. T can be regarded as a 3-ball removed three 3-balls. For a pair $\{S_k, S'_k\}$, let T_{i_k}, T_{j_k} be the two of T_i's which include S_k, S'_k as their boundary component. Put a mirror between T_{i_k}, T_{j_k} as in Figure 6. $(T_{i_k} \cup_{S_k = -S'_k} T_{j_k}, \hat{\Gamma}_{i_k} \cup \hat{\Gamma}_{j_k})$ is a pair of a 3-manifold and arcs properly embedded in this 3-manifold which given as a result of identification of S_k, S'_k given by using this mirror. Do the same thing for other pairs, then we have a pair $(\hat{T}, \hat{\hat{\Gamma}})$ of a 3-manifold and arcs properly embedded in this 3-manifold. Construct a cyclic branched covering $\tilde{T}$ of this 3-manifold $\hat{T}$ whose branch point set is $\hat{\hat{\Gamma}}$. We call this 3-manifold $\tilde{T}$ given as a result of this process a *trivalent manifold.*

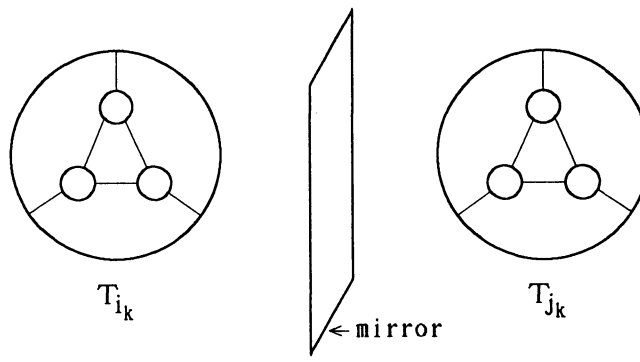

Fig. 6.

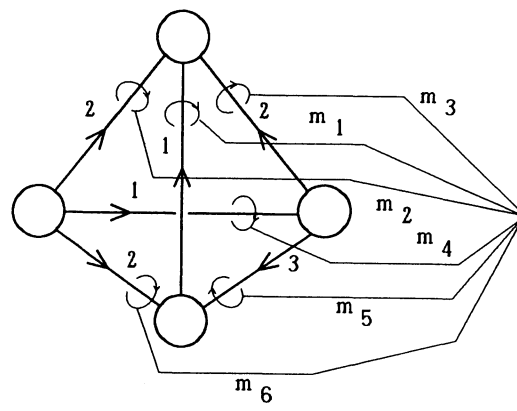

Fig. 7.

REMARK. The homeomorphism type of $\tilde{T}$ is depend not only on $(\hat{T},\hat{\hat{\Gamma}})$ but also on the type of cyclic branched covering.

EXAMPLE. Let (F,f) be a trivalent map of period 4, and embed a graph $\Gamma_{f,p}$ with weight into S^3 as indicated in Figure 7. T is a 3-manifold constructed from a 3-sphere with removing neighborhood of each vertices. Define $\hat{\Gamma}_{f,p}=\Gamma_{f,p}\cap T$. The fundamental group of a space $T-\hat{\Gamma}_{f,p}$ is generated by the loops $m_1,m_2,\cdots m_6$ given in Figure 7. (As a system of generators of this fundamental group, four of them is enough.) We define a homomorphism ρ from $\pi_1(T-\hat{\Gamma}_f,*)$ to $\boldsymbol{Z}_4$ by $\rho(m_1)=1$, $\rho(m_2)=1$, $\rho(m_3)=2$, $\rho(m_4)=1$, $\rho(m_5)=3$, $\rho(m_6)=2$, we can easily check the well-definedness of this homomorphism. Let $\hat{T}_0$ be the covering space of $T-\hat{\Gamma}_f$ whose fundamental group is $\ker\rho$. Let $\pi:\hat{T}\to T$ be the branched covering associated to the covering $\hat{T}_0\to T\to\hat{\Gamma}_f$. The covering transformation group of $\pi:\hat{T}\to T$ is $\boldsymbol{Z}_4$. The manifold T is a trivalent manifold, and a generator of this group $\hat{f}:\hat{T}\to\hat{T}$ satisfies $\partial(\hat{T},\hat{f})=(F,f)$.

Any 3-manifold M which is a cyclic branched covering space of T whose branch point set is $\hat{\Gamma}$ (denote this cyclic branched covering by $\pi:M\to T$), has a hyperbolic structure with geodesic boundaries or cusps. This structure can be constructed as follows:
For a connected component l of $\hat{\Gamma}$, let x be a point in l, and D be the regular neighborhood of x in T sufficiently small such that D does not include points in $\hat{\Gamma}-l$. Let $\tilde{D}$ be a component of $\pi^{-1}(D)$. Then, $\pi|_{\tilde{D}}:\tilde{D}\to D$ is a n-fold cyclic branched covering. This number does not depend on the choice of the point x in l, and the choice of $\tilde{D}$. We call this number n a *branching index* of l. For a periodic automorphism f on a surface F, by the same manner, we can define a *branching index* of $s\in S_f$. Here, we review the definition of a truncated tetrahedra [K]. Let L_1, L_2, L_3 and L_4 be geodesic planes in the 3-dimensional hyperbolic space $\boldsymbol{H}^3$, every two of which intersect each other, and every three of which intersect at infinity or do not intersect. For each three of them, say L_2, L_2 and L_3, which do not intersect, there is unique geodesic plane P_{123} which intersects with them perpendiculary [K; Lemma 2.1]. The domain D in $\boldsymbol{H}^3$ bounded by these L's and P's are called a *truncated tetrahedra.* The face of D which is a part of P's is called a *truncation face.* For a truncated tetrahedra, label the internal edges as in Figure 8 and denote the dihedral angle along the edges j by φ_j. The sufficient and necessary condition of φ_j's to the existence of a truncated tetrahedra whose dihedral angles are these numbers is

$$\begin{cases} \varphi_1+\varphi_2+\varphi_3\leq\pi \\ \varphi_1+\varphi_5+\varphi_6\leq\pi \\ \varphi_2+\varphi_4+\varphi_6\leq\pi \\ \varphi_3+\varphi_4+\varphi_5\leq\pi \end{cases}$$

[K; Lemma 2.3].

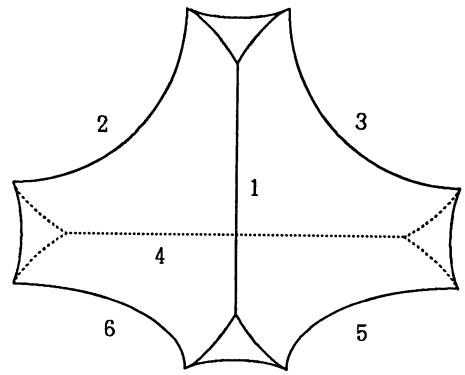

Fig. 8.

REMARK. In [K], the definition of a truncated tetrahedra is slightly different, namely the case which some three of L_1, L_2, L_3 and L_4 intersect at infinity is excludeed, but, here, to avoid complexity, we do not exclude this case. Of course, the above sufficient and necessary condition is a little different, however, we can prove this in the same manner as [K].

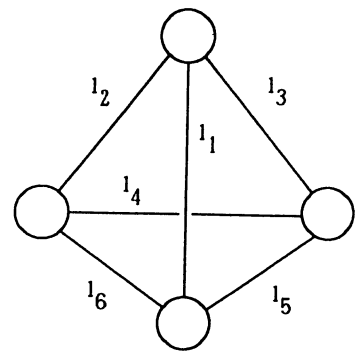

Fig. 9.

Label each component of $\hat{\Gamma}$ as in Figure 9. Let n_i be a branching index of l_i of the cyclic branched covering $\pi: M \to T$. Define $\varphi_i = \pi / n_i$, then φ_i's satisfy the above condition, because each boundary of T is an orbit space of a trivalent map which acts on the surface with genus more than 1. Therefore, we have a truncated tetrahedra whose dihedral angles are φ_i's. Make a double of this truncated tetrahedra along a surface which is not truncation face, then this define a hyperbolic orbifold structure on T whose singular locus is $\hat{\Gamma}$. Lift this hyperbolic orbifold

structure to M. Since, for each component l of $\hat{\Gamma}$, the total of the dihedral angle around $\pi^{-1}(l)$is $(\pi/n_i \times 2)\times n_i = 2\pi$, this define a hyperbolic structure on M.

Any trivalent manifold is constructed from a disjoint union of the above M's with identifying some components of boundaries in a way compatible with the structure of the branched covering. This identification is given as an isometry on the hyperbolic structure constructed above. Therefore, we can give a hyperbolic structure to any trivalent manifold. We showed the following:

Proposition 6. *Any trivalent manifold is a compact, irreducible sufficiently-large 3-manifold, by essential tori, decomposed into hyperbolic 3-manifolds with geodesic boundaries or cusps.*

As a corollary of this Proposition and a relative version of Gromov's Theorem [T; 6.5.4], we can see the following:

Corollary. *Any trivalent manifold is not a Seifert fibered space.*

EXAMPLE. We will give a hyperbolic structure to a trivalent manifold $\hat{T}$ of the last example. Let $\boldsymbol{H}^3 = \{(x,y,z)\in \boldsymbol{R}^3 \mid z>0\}$ be the upper half space with the hyperbolic metric. The domain $D_{1/2} = \{(x,y,z)\in \boldsymbol{H}^3 \mid 0\le x\le 1,\ 0\le y\le x,\ z \ge \sqrt{(x-1/2)^2+(y-1/2)^2}\}$ is a truncated tetrahedra. Make a double of $D_{1/2}$, then we get hyperbolic orbifold whose underlying space is T and whose singular locus is $\hat{\Gamma}$. Let G be the Kleinean group generated by

$$g_1 = \begin{pmatrix} 1 & 2 \\ 0 & 1 \end{pmatrix},\quad g_2 = \begin{pmatrix} 1 & 2i \\ 0 & 1 \end{pmatrix},\quad h_1 = \begin{pmatrix} 1 & 0 \\ -i-1 & 1 \end{pmatrix},\quad h_2 = \begin{pmatrix} 1 & 0 \\ i-1 & 1 \end{pmatrix}$$

The fundamental domain of G is

$$\begin{aligned} D = &\{(x,y,z)\in \boldsymbol{H}^3 \mid 0\le x\le 1,\ 0\le y\le 1,\ z\ge \sqrt{(x-1/2)^2+(y-1/2)^2}\} \\ &\cup \{(x,y,z)\in \boldsymbol{H}^3 \mid 0\le x\le 1,\ -1\le y\le 0,\ z\ge \sqrt{(x-1/2)^2+(y+1/2)^2}\} \\ &\cup \{(x,y,z)\in \boldsymbol{H}^3 \mid -1\le x\le 0,\ -1\le y\le 0,\ z\ge \sqrt{(x+1/2)^2+(y+1/2)^2}\} \\ &\cup \{(x,y,z)\in \boldsymbol{H}^3 \mid -1\le x\le 0,\ 0\le y\le 1,\ z\ge \sqrt{(x+1/2)^2+(y-1/2)^2}\} \end{aligned}$$

$\boldsymbol{H}^3/G$ is a hyperbolic 3-manifold with four cusps given from D by identifying $\{(x,y,z)\in D \mid x=1\}$ with $\{(x,y,z)\in D \mid x=-1\}$, $\{(x,y,z)\in D \mid y=1\}$ with $\{(x,y,z)\in D \mid y=1\}$, $\{(x,y,z)\in D \mid 0\le x\le 1,\ 0\le y\le 1,\ z\ge \sqrt{(x-1/2)^2+(y-1/2)^2}\}$ with $\{(x,y,z)\in D \mid -1\le x\le 0,\ -1\le y\le 0,\ z\ge \sqrt{(x+1/2)^2+(y+1/2)^2}\}$, $\{(x,y,z)\in D \mid 0\le x\le 1,\ -1\le y\le 0,\ z\ge \sqrt{(x-1/2)^2+(y+1/2)^2}\}$ with $\{(x,y,z)\in D \mid -1\le x\le 0,\ 0\le y\le 1,\ z\ge \sqrt{(x+1/2)^2+(y-1/2)^2}\}$. The interior of $\hat{T}$ is homeomorphic to $\boldsymbol{H}^3/G$. An

element of isometry of H^3 given by

$$\begin{pmatrix} e^{i\pi/4} & 0 \\ 0 & e^{-i\pi/4} \end{pmatrix}$$

induce an isomorphism $\hat{f}$ on H^3/G. This map $\hat{f}$ is a periodic map with period 4 and $(H^3/G,\hat{f})$ is periodic null-cobordism of (F,f) in the last example.

4. Proof of Theorem 1

In this section, we prove Theorem 1.

DEFINITION. The trivalent map (F,f) and $p \in P_f$ is simple piece if $\Gamma_{f,p}$ is one of the two types of trivalent graph given in Figure 4. If $\Gamma_{f,p}$ is Figure 4(i)(resp. Figure 4(ii)), (F,f) and p is called a simple piece of type I (resp. type II).

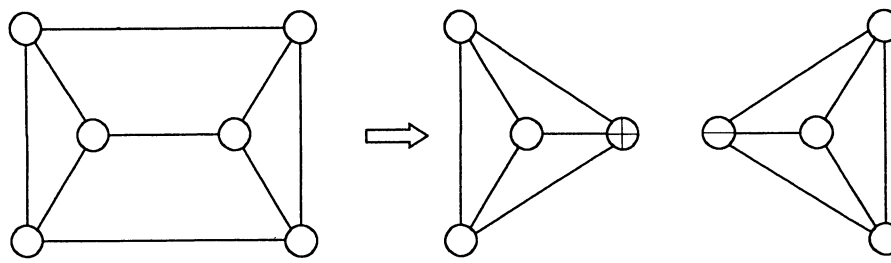

Fig. 10.

From here to the end of this paper, we write Γ_f instead of $\Gamma_{f,p}$ for the sake of avoiding complications of notation. But, remark that Γ_f is depend also on $p \in P_f$. Let (F,f) be a periodic null-cobordant trivalent map which corresponds to a graph Γ_f as in the left hand of Figure 10. We can modify the graph Γ_f to the disjoint union of two trivalent graphs $\Gamma_{f'}$, $\Gamma_{f''}$ by adding two vertices, where $\oplus = -\ominus = (\tilde{F},\tilde{f})$. Let (F',f'), (F'',f'') be trivalent maps corresponding to $\Gamma_{f'}$, $\Gamma_{f''}$ and let $(M',\hat{f}')$, $(M'',\hat{f}'')$ be periodic automorphisms which are periodic null-cobordisums of (F',f'), (F'',f''). Then the periodic automorphism $(M' \underset{\tilde{F}}{\cup} M'', \hat{f}' \cup \hat{f}'')$ gives a periodic null-cobordism of (F,f). Therefore, the periodic null-cobordism can be constructed by gluing periodic null-cobordisms of simple pieces of type II. The same holds for any periodic null-cobordant trivalent map (F,f).

Proposition 7. *Let (F,f) be any periodic null-cobordant trivalent map, then there is a disjoint union of trivalent manifolds and surface $\times I$ which is a periodic*

null-cobordism of (F,f).

Proof. We prove this by induction on the number c of components of F/f. If $c=2$, this proposition follows from Remark at the end of section 1. If $c\geq 4$, let C be the circuit of Γ_f which has the minimal number of edges, say m (see Figure 11). If m is 2, then Γ_f can be modified into a disjoint union of Γ'_f with $c-2$ vertices and simple piece of type I (see Remark at the end of section 1). If m is more than or equal to 3, then we can modify Γ_f in the dotted circle so as to be the disjoint

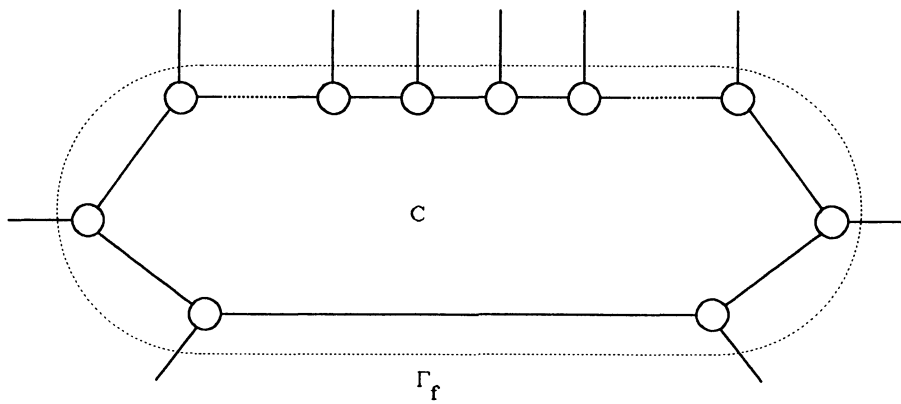

Fig. 11.

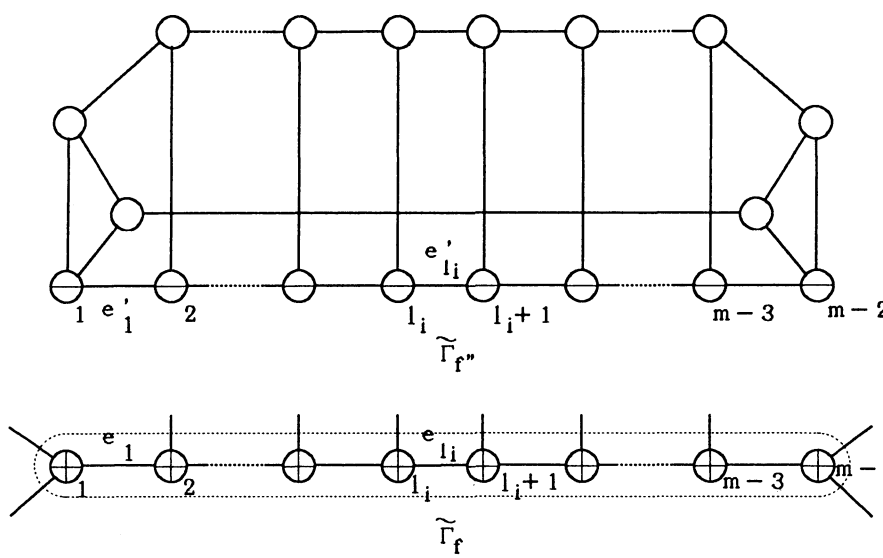

Fig. 12.

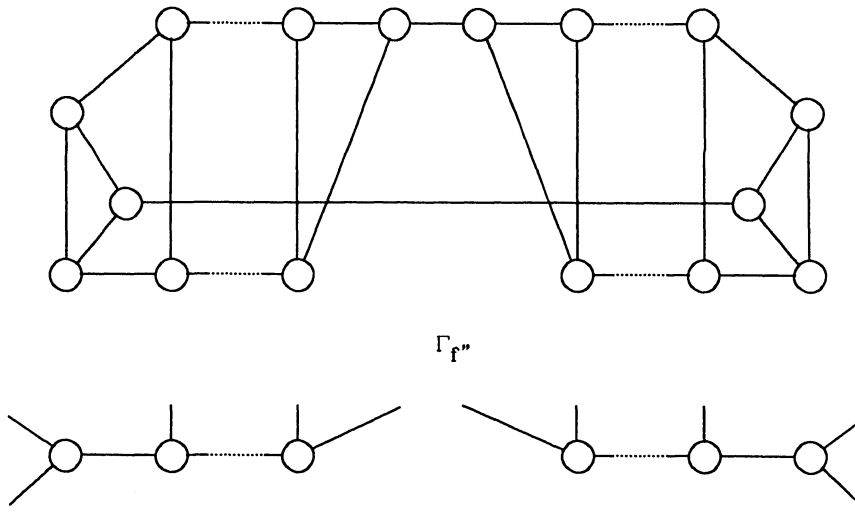

Fig. 13.

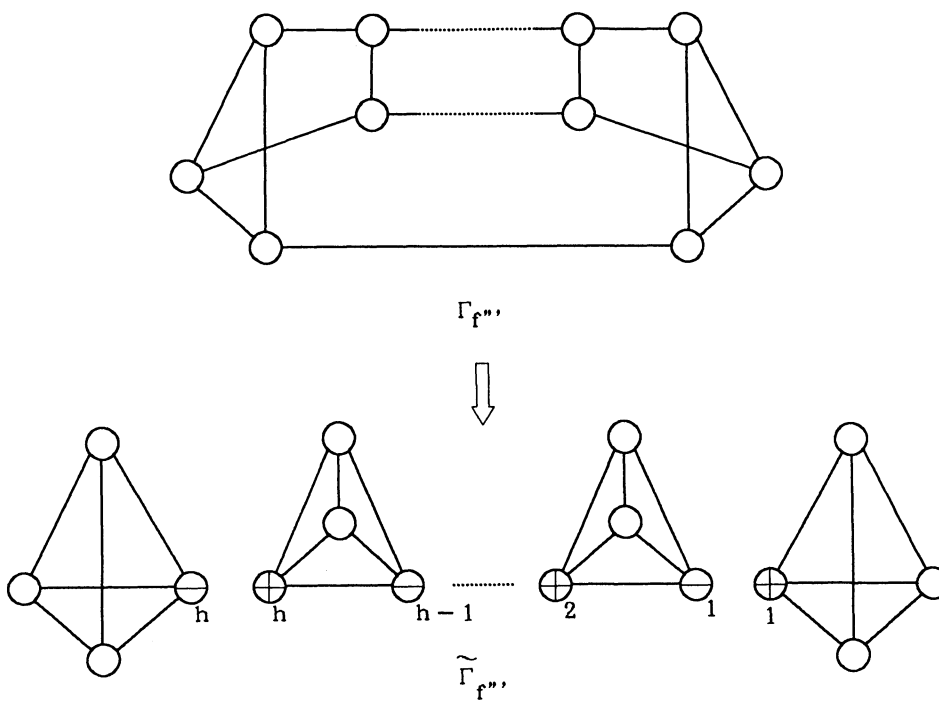

Fig. 14.

union of $\tilde{\Gamma}_{f'}$, and $\tilde{\Gamma}_{f''}$ by adding vertices with $\oplus_i = -\ominus_i$ and edges e_i, e'_i $(i=1,\cdots,m-2)$ as in Figure 12. Let $(\tilde{F}',\tilde{f}')$, $(\tilde{F}'',\tilde{f}'')$ be trivalent maps correspond to $\tilde{\Gamma}_{f'}$, $\tilde{\Gamma}_{f''}$. There may be edges whose end points have indices 0. Denote these edges by $e_{l_1},\cdots,e_{l_k},e'_{l_1},\cdots,e'_{l_k}$. Periodic maps $\oplus_{l_i}$, $\ominus_{l_i}$, $\oplus_{l_i+1}$, $\ominus_{l_i+1}$, $(i=1,\cdots,k)$ are $(n,0,2)$-periodic maps and bound periodic maps on 3-balls. Therefore, we cna remove these maps and get two graphs $\Gamma_{f'}$, $\Gamma_{f''}$ (see Figure 13). Let trivalent maps (F',f'') and (F'',f'') correspond to $\Gamma_{f'}$, $\Gamma_{f''}$. These trivalent maps (F',f''), (F'',f'') are periodic null-cobordant, and in a similar fashion as a discussion before the claim of this proposition, a periodic null-cobordism of (F,f) is constructed from periodic null-cobordisms of (F',f'') and (F'',f''). The trivalent graph $\Gamma_{f'}$ has fewer vertices than Γ_f, that is F'/f' has fewer components than F/f. By the assumption of induction, the periodic null-cobordism of (F',f'') can be constructed from periodic null-cobordisms of simple pieces. For the periodic map (F'',f''), by changing the pairing of $S_{f''}$, we can alter $\Gamma_{f''}$ to the disjoint union of trivalent graphs $\Gamma_{f'''}$ as in Figure 14. Let the periodic null-cobordant trivalent map (F''',f''') correspond to $\Gamma_{f'''}$. The trivalent graph $\tilde{\Gamma}_{f'''}$ is gotten from $\Gamma_{f'''}$ with adding $2h$ vertices $\oplus_1,\cdots,\oplus_h$, $\ominus_1,\cdots,\ominus_h$ where $\oplus_i = -\ominus_i$ $(i=1,\cdots,h)$. The periodic null-cobordant trivalent map corresponding to $\tilde{\Gamma}_{f'''}$ is a disjoint union of simple pieces of type II and a periodic null-cobordism of (F''',f''') is constructed from its periodic null-cobordism.

By Proposition A, Theorem 3, and Proposition 7, we can prove Theorem 1, and by Theorem 1 and Corollary of Proposition 6, we can prove Theorem 1′.

5. Periodic cobordism groups

Let $\Delta^P_{2+}(n)$ denote the subgroup of periodic cobordism classes of automorphisms (F,f) with the total period n. Bonahon [B; Proposition 8.3] proved that $\Delta^P_{2+}(n) \cong \boldsymbol{Z}^{[(n-1)/2]}$ (here [ ] means "integer part"). In this section, we give an explicit generator of this group by trivalent maps.

Theorem 8. *Let* $x_i = \{1,i,n-1-i;n\}$ $(i=1,\cdots,[(n-1)/2])$. *Then*

$$\Delta^P_{2+}(n) \cong \boldsymbol{Z}x_1 \oplus \cdots \oplus \boldsymbol{Z}x_{[(n-1)/2]}.$$

Proof. Following from Theorem 3, any periodic map is periodic cobordant to a trivalent map. Therefore, trivalent maps generate $\Delta^P_{2+}(n)$ with the relations represented by trivalent graphs Γ_f.

Claim 1. $x_1,\cdots,x_{[(n-1)/2]}$ generate $\Delta^P_{2+}(n)$.

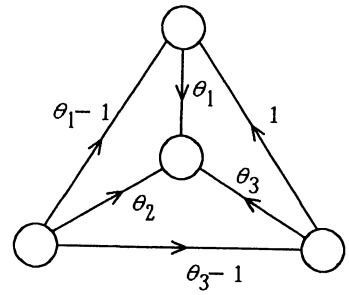

Fig. 15.

For any trivalent map $\{\theta_1,\theta_2,\theta_3;n\}$ (θ_1 is the least among θ_i's and $\theta_i \neq 1$), $\{\theta_1,\theta_2,\theta_3;n\} = \{\theta_1-1,\theta_2,\theta_3+1;n\} + \{1,\theta_3,n-\theta_3-1;n\} - \{1,\theta_1-1,n-\theta_1;n\}$ as elements of $\Delta^P_{2+}(n)$ (see Figure 15). By this formula, this claim is shown by induction on θ_1.

Claim 2. There is no relation among x_i's.

Let $\mathscr{F}^P_+(n)$ denote the set of oriented conjugacy classes of automorphisms (F,f), where f preserves the orientation of F and is periodic with the total period n. This set $\mathscr{F}^P_+(n)$ is the abelian group where the group law is induced by disjoint sum $\amalg$. Let the integer $v_c(f)$ be the number of points $x \in S_f$ such that $I_f(x) = c$. If the period n is an odd integer, we can define the homomorphism $\bar{\psi}$ from $\mathscr{F}^P_+(n)$ to $\boldsymbol{Z}^{[(n-1)/2]}$ by:

$$\bar{\psi}(F,f) = (v_a(f) - v_{n-a}(f))_{a=1,\cdots,[(n-1)/2]}.$$

Using Lemma 5, the homomorphism ψ from $\Delta^P_+(n)$ to $\boldsymbol{Z}^{[(n-1)/2]}$ is naturally induced from $\bar{\psi}$, and it is injective. Let ϕ be the natural surjective homomorphism from $\boldsymbol{Z}x_1 \oplus \cdots \oplus \boldsymbol{Z}x_{[(n-1)/2]}$ to $\mathscr{F}^P_+(n)$. Then $\psi \circ \phi(x_1) = (2,-1,0,\cdots,0)$, $\psi \circ \phi(x_i) = (1,0,\cdots,0,\underset{(i)}{1},\underset{(i+1)}{-1},0,\cdots,0)$ $(i \neq 1,[(n-1)/2])$ and $\psi \circ \phi(x_{[(n-1)/2]}) = (1,0,\cdots,0,2)$. If $\operatorname{Ker}\psi \circ \phi$ and $y = m_1x_1 + m_2x_2 + \cdots + m_{[(n-1)/2]}x_{[(n-1)/2]}$, then $\psi \circ \phi(y) = (2m_1 + m_2 + \cdots + m_{[(n-1)/2]}, m_2 - m_1, m_3 - m_2, \cdots, m_{[(n-1)/2]} - m_{[(n-1)/2]-1}) = (0,\cdots,0)$. Therefore $y = 0$ and $\psi \circ \phi$ is injective. So, ϕ is an isomorphism. If the period n is an even integer, we can define the homomorphism $\bar{\psi}$ from $\mathscr{F}^P_+(n)$to $\boldsymbol{Z}^{[(n-1)/2]} \oplus \boldsymbol{Z}_2$ by:

$$\bar{\psi}(F,f) = (v_a(f) - v_{n-a}(f))_{a=1,\cdots,[(n-1)/2]}, \overline{v_{n/2}(f)}),$$

which induces the injective homomorphism ψ from $\Delta^P_+(n)$ to $\boldsymbol{Z}^{[(n-1)/2]} \oplus \boldsymbol{Z}_2$. Let ϕ be as above, then $\psi \circ \phi(x_1) = (2,-1,0,\cdots,0)$, $\psi \circ \phi(x_i) = (1,0,\cdots,0,\underset{(i)}{1},\underset{(i+1)}{-1},0,\cdots,0)$ $(i \neq 1,[(n-1)/2])$ and $\psi \circ \phi(x_{[(n-2)/2]}) = (1,0,\cdots,0,1,1)$. We can see $\psi \circ \phi$ is injective as above. Therefore, ϕ is an isomorphism.

REMARK. The homomorphism ψ is originally given by Bonahon [B] in the

proof of Proposition 8.3.

References

[B] F. Bonahon: *Cobordism of automorphism of surfaces*, Ann. Sci. Ecole. Norm. Sup. **16** (1983), 237–270

[EE] A.L. Edmonds and J.H. Ewing: *Remarks on the Cobordism Group of Surface Diffeomorphisms*, Math. Ann. **259** (1982), 497–504

[FK] H.M. Farkas and I. Kra: Riemann Surfaces (second edition), Springer, Berlin, 1991

[H] W.J. Harvey: *Cyclic groups of automorphisms of a compact Riemann surface*, Quart. J. Math. Oxford **Ser. (2) 17** (1966), 86–97

[JS] W. Jaco and P. Shalen: *Seifert fibered spaces in 3-manifolds*, Memoirs of A.M.S. No. 220 (1979)

[Jo] J. Johannson: *Homotopy equivalences of 3-manifolds with boundaries*, Springer Lect. Notes No. 761(1979)

[K] S. Kojima: *Polyhedral decomposition of Hyperbolic 3-manifolds with totally geodesic boundary*, Adv. Studies in Pure Math. **20** (1992), 93–112

[T] W. Thurston: *The geometry and topology of 3-manifolds*, Mineographed Notes, Princeton University, 1976–1979

[W] F. Waldhausen: *On irreducible 3-manifolds which are sufficiently large*, Ann. Math. **87** (1968) 56–88

[Y] K. Yokoyamaa: *Classification of periodic maps on compact surfaces: I* Tokyo. J. Math. **6** (1983) 75–94

Department of Mathematics
Faculty of Science and Engineering
Saga University
Saga 840, Japan