Osaka University Knowledge Archive

Title	Effects of Initial Imperfection due to Welding on Rigidity and Strength of Triangular Corner Bracket
Author(s)	Ueda, Yukio; Kuramoto, Yoshio; Yao, Tetsuya
Citation	Transactions of JWRI. 1977, 6(1), p. 39-45
Version Type	VoR
URL	https://doi.org/10.18910/8522
rights	
Note	

Osaka University Knowledge Archive : OUKA

https://ir.library.osaka-u.ac.jp/

Osaka University

Effects of Initial Imperfection due to Welding on Rigidity and Strength of Triangular Corner Bracket†

Yukio UEDA*, Yoshio KURAMOTO and Tetsuya YAO*****

Abstract

The function of corner bracket is considered to reduce the stress concentration at the corner of main members, to increase the rigidity of the conjunction, etc.. In the case where the size of the bracket is of the same order of magnitude as the main members, its contribution to the strength can be expected to a certain extent. In this study, the buckling, and ultimate strength and rigidity of triangular corner bracket is theoretically and experimentally investigated with consideration of the effects of welding residual stresses and deformation, and reinforcement with stiffener.

For theoretical analyses, such as elastic-plastic large deflection analysis, elastic-plastic thermal stress analysis, etc., the methods which were developed by the authors with the aid of the finite element method are applied. Initial deflection of the bracket reduces the rigidity and ultimate strength as observed in the case of square plates under compression. Welding residual stresses in the bracket are not self-balanced due to the existence of the main menbers, and are mostly in tension. The tensile residual stresses increase the strength of the bracket. Stiffener provided along the free edge also increases the strength.

1. Introduction

Triangular brackets such as corner brackets or tripping brackets are generally used in ship structures. As for tripping brackets, there are several papers in which their rigidity and strength[1)2)] or reinforcement of main structures were studied.[3)] However, as for corner brackets, only few studies were reported, which are theoretical study on buckling strength[4)] and experimental study on fatigue strength[5)] and ultimate strength.[6)]

The function of corner brackets is considered to reduce stress concentration, to increase rigidity of the conjunction, etc.. In this study, the buckling strength, ultimate strength and rigidity of triangular corner brackets are investigated both theoretically and experimentally with consideration of the effects of welding residual stresses and deformation, and the reinforcement with stiffeners. The welding residual stresses are also investigated, and the theoretical results are compared with the measured ones. For the theoretical analyses such as buckling strength analysis, elastic-plastic large deflection analysis and elastic-plastic thermal stress analysis, the methods which were developed by the authors with the aid of the finite element method are applied.[7)8)9)]

2. Theoretical analyses

A series of theoretical analyses is carried out on the right-angle isosceles triangular corner bracket under the following loading and boundary conditions as shown in **Fig. 1**. The finite element representation is

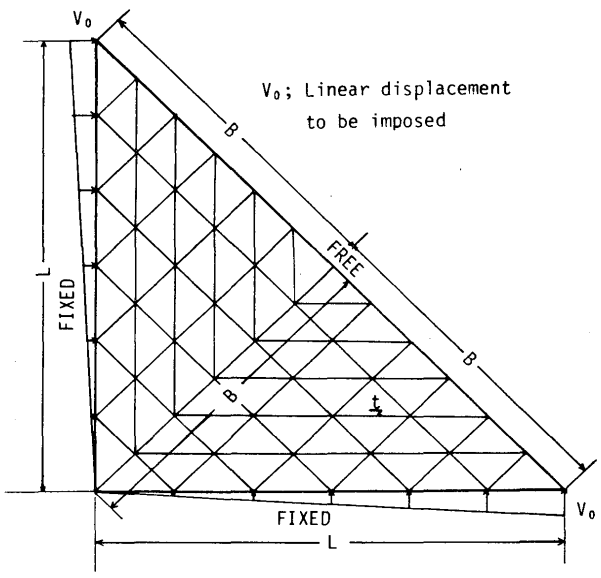

Fig. 1 Finite element representation of triangular bracket with loading and supporting conditions

† Received on March 31, 1977
* Professor
** Nagasaki Technical Research Institute, Mitsubishi Heavy Industry, Ltd.
*** Research associate

also illustrated in this figure. The external load is applied by forced displacements on the two sides, keeping them straight. For out-of-plane deformation the triangular bracket is fixed along two sides and is free or simply supported along the remaining hypotenuse. As described above, these loading and boundary conditions are quite simplified, but they are considered to be very close to actual ones observed in ship structures. The results obtained by the theoretical analysis under these conditions show good agreement with the test results to be mentioned later.

2.1 Buckling strength

The theoretical buckling strength computed may be expressed in the following form.

$$\sigma_{cr}=k\frac{\pi^2 E}{12(1-\nu^2)}\left(\frac{t}{B}\right)^2 \qquad (1)$$

where

$$\begin{aligned} k&=3.179 \quad \text{(for the 1st mode buckling)} \\ k&=4.033 \quad \text{(for the 2nd mode buckling)} \end{aligned} \qquad (2)$$

Figure 2 shows the buckling mode and the distribution of stresses and reaction forces along the loading edges at the 1st mode buckling when $t=3.2$ mm and $L=320$ mm.

In relation to the above buckling analysis, various kinds of other boundary conditions can also be assumed for out-of-plane deformation, and under various supporting conditions for reference the obtained buckling coefficients, k, are summarized in **Table 1**.

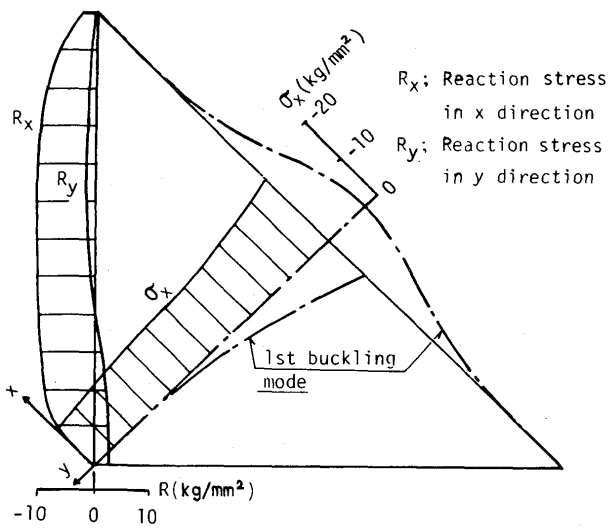

Fig. 2 Stress distribution and deflection mode at 1st buckling mode

Table 1 Buckling strength of triangular bracket under various supporting conditions

Loading edge	s.s.	s.s.	fixed	fixed	s.s.	s.s.	fixed	fixed
Free edge	free	free	free	free	s.s.	s.s.	s.s.	s.s.
k	0.532	1.960	3.179	4.033	6.646	6.837	6.353	7.380
Buckling mode	1st	2nd	1st	2nd	1st	2nd	1st	2nd
$(V_{0cr}/L)/(t/L)^2$	0.274	1.010	1.639	2.079	3.426	3.523	3.273	3.803

s.s.: simply supported $\quad \sigma_{cr}=k\frac{\pi^2 E}{12(1-\nu^2)}\left(\frac{t}{B}\right)^2$

2.2 Rigidity and ultimate strength

An elastic-plastic large deflection analysis is performed on the triangular bracket of side length to thickness ratio, L/t, being 50, 65, 80, 100 and 150. The bracket is assumed to have initial deflection of the form.

$$w=\frac{w_0}{4}\left(1+\cos\frac{\pi x}{\lambda_x}\right)\left(1+\cos\frac{\pi(y+B)}{\lambda_y}\right) \qquad (3)$$

where $\lambda_x=|y|$ and $\lambda_y=B-|x|$, and x and y-coordinates are those shown in **Fig. 2**.

The thickness of the bracket is chosen as 3.2 mm, the value of w_0 being 0.032 mm. The behavior of the triangular bracket is shown in **Fig. 3** when $L/t=100$. In this figure, load-lateral deflection curve, load-compressive displacement curve, stress distributions and deflection modes at several loading stages are illustrated, where σ_B is an avarage stress at the middle section, AA' and D is the in-plane rigidity of the bracket before buckling occurs.

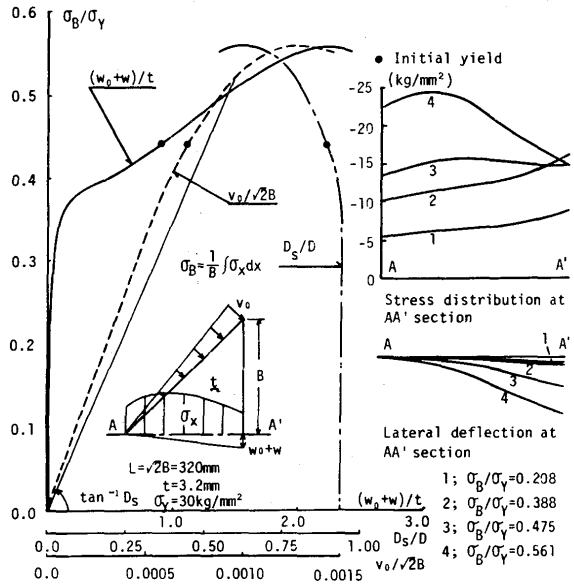

Fig. 3 Changes in lateral deflection, in-plane displacement and in-plane rigidity against the mean stress at AA′ section

2.3 Effect of initial deflection on the rigidity and strength

In actual structures, triangular corner bracket is attatched to the main members by welding on two sides making right angle, and consequently the welding residual stresses and deformation are produced in the bracket. In this section, the effect of intial deflection on the rigidity and strength is investigated. First, theoretical analysis is performed on the traingular bracket of t=3.2 mm and L=320 mm, with initial deflection of the form given by Eq. (3) where w_0 is 0.25, 0.50 and 1.00 times the plate thickness. The load-lateral deflection curves obtained are plotted in **Fig. 4**. Then, changing the side length to thickness ratio, L/t, to 50, 65, 80 and 150, the same analysis is performed, and the results on the ultimate strength are summarized in **Table 2**.

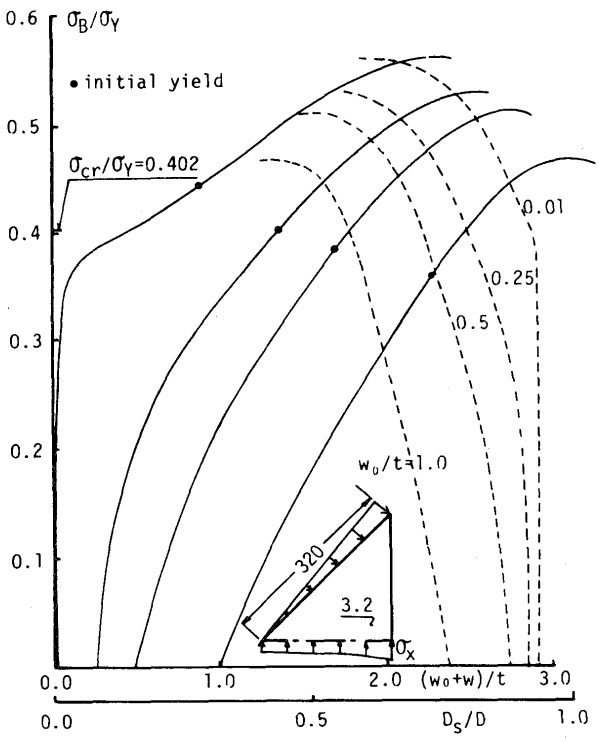

Fig. 4 Effect of the magnitude of initial deflection on the rigidity and strength of triangular bracket

Table 2 Ultimate strength (σ_B/σ_Y) of triangular bracket with initial deflection

L/t \ w_0/t	0.01	0.25	0.50	1.00
50	0.862	—	—	0.666
65	0.782	—	—	0.596
80	0.684	—	—	0.545
100	0.561	0.528	0.508	0.466
150	0.384	—	—	0.346

2.4 Welding residual stresses in the triangular bracket

In this section, in order to obtain informations on the welding residual stresses in the triangular bracket, the heat conduction analysis and the elastic-plastic thermal stress analysis are performed on the triangular bracket of t=3.2 mm and L=320 mm. As a heat input of welding, 16,000 Joule/cm is given instantaneously along the two sides making right angle. The change of temperature distribution after welding and the resulting welding residual stresses are shown in **Figs. 5(a)** and **(b)**, respectively. The measured welding residual stresses on the specimen of the same size is also plotted in this figure, and a good agreement is obtained between the theoretical and measured ones.

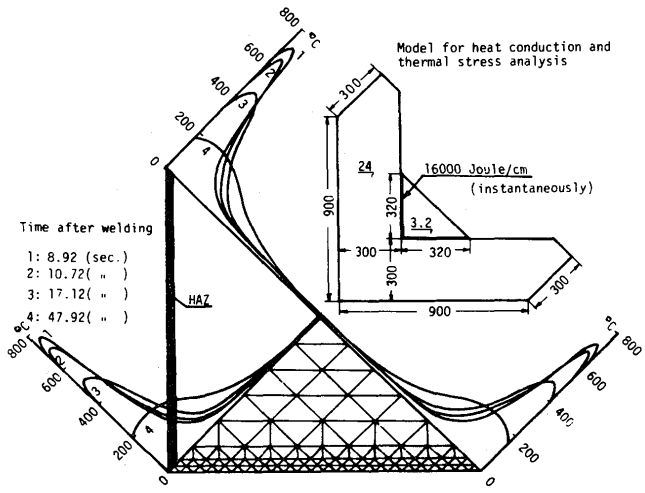

(a) Changes in temperature distribution after welding

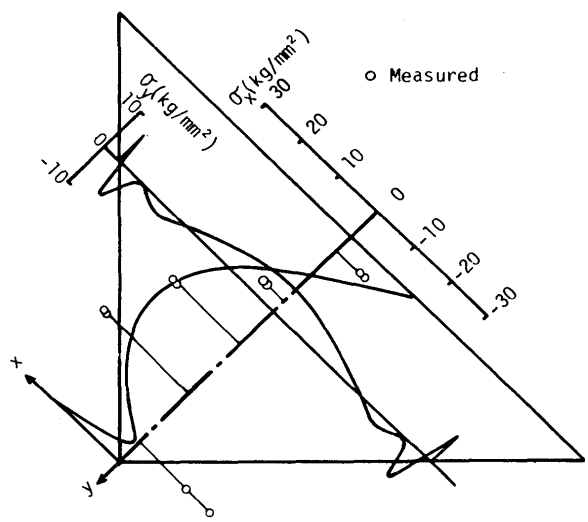

(b) Distribution of welding residual stresses

Fig. 5 Analysis of welding residual stresses in the triangular bracket (L/t=100)

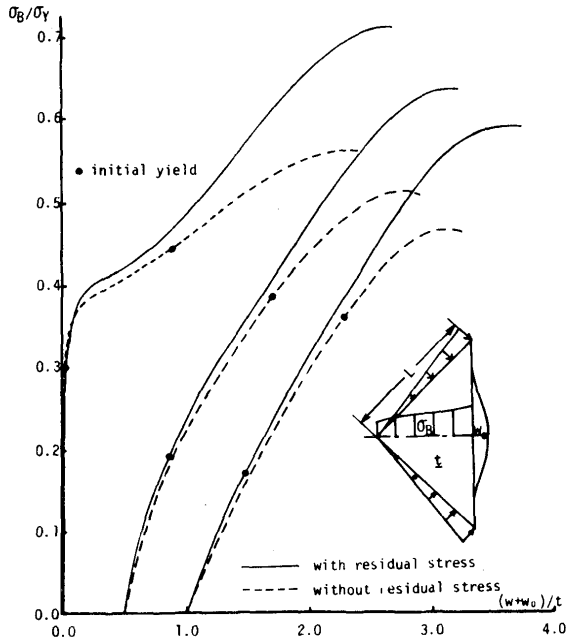

Fig. 6 Effect of welding residual stresses on the strength of triangular bracket

2.5 Effect of welding residual stresses on the rigidity and strength

With welding residual stresses obtained above, the effect of residual stresses on the rigidity and strength is investigated, in the case of t=3.2 mm and L=320 mm. The initial deflection of the form given by Eq. (3) and of the magnitude w_0/t=0.01, 0.50 and 1.00 is assumed. The relation between mean compressive stress on the symmetric axis and lateral deflection is shown in **Fig. 6** for each case.

2.6 Effect of stiffener on the rigidity and strength

Triangular corner brackets are usually reinforced with the stiffeners. Here, a stiffener is assumed to be attatched to the bracket along its free edge. When the stiffener is sufficiently stiff, and the free edge is supposed to be simply supported, the value of the theoretical buckling coefficient, k, in Eq. (1) is 6.353. Therefore, the value of the buckling coefficient of the actual stiffened bracket lies between 3.179 and 6.353. A series of elastic-plastic large deflection analysis is also performed on the triangular bracket reinforced by the stiffener along its free edge. **Figure 7** shows the changes in the stress distribution and the lateral deflection along the symmetric axis of the bracket of t=3.2 mm and L=480 mm, with and without a stiffener. In this figure, P-Type is the bracket without a stiffener and F-Type is the bracket with a stiffener of which hight is 54 mm. The same analysis is also performed on the brackets whose L/t ratio and the hight of the stiffener furnished are varied. The ultimate strengths obtained by the analysis are summarized in **Table 3**.

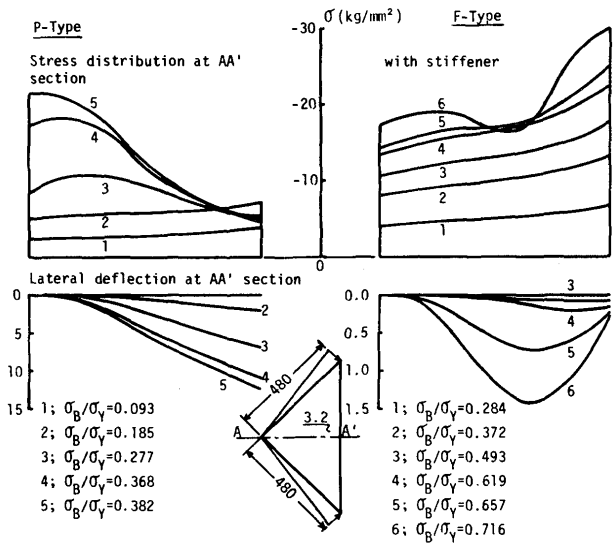

Fig. 7 Effect of the stiffener on the behavior of triangular bracket

Table 3 Effect of the stiffener on the ultimate strength of triangular bracket

L/t \ hxts (mm)	18x3.2	36x3.2	54x3.2	72x3.2
50	1.011	1.080	——	——
100	——	0.980	1.067	——
150	——	——	0.716	0.770

3. Experiment

3.1 Test specimens

A series of experiment is also conducted to confirm the results obtained by the theoretical analysis. Each test specimen consists of two I-section beams and a triangular bracket as illustrated in **Fig. 8**.

The process of constructing the test specimen is as follows;

(1) the initial deflection is imposed in a square plate by applying air pressure, and

(2) the square plate is cut into two right angled isosceles triangulars,

(3) then, the triangular bracket is attatched to a frame of the two beams by welding.

Four types of triangular brackets are furnished, which are P-, R-, D- and F-Type as shown in **Fig. 8**. P-Type is an ordinary triangular bracket, and R-Type has a round free edge. F-Type and D-Type have one and two stiffeners, respectively. The mechanical properties of the material used is shown in **Table 4**. **Table 5** summarizes the specimen number together with the test

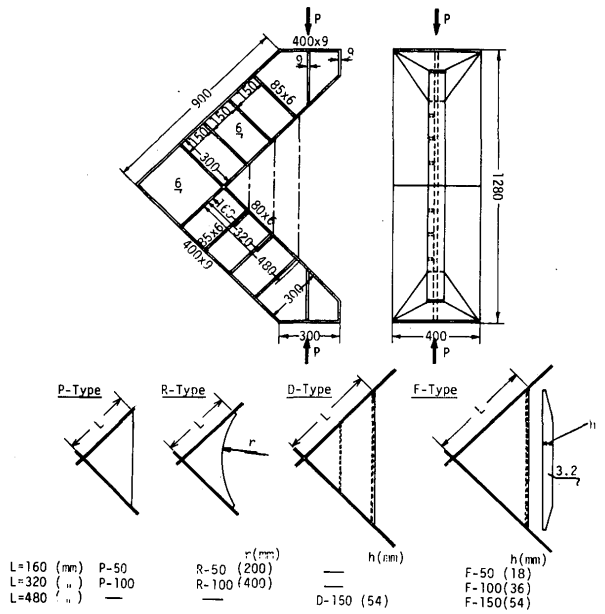

Fig. 8 Details of test specimens

Table 4 Mechanical properties of the material

Plate thickness (mm)	σ_Y (kg/mm²)	σ_B (kg/mm²)	Elongation (%)
3.2	30.0	47.0	36.0
6.0	31.3	50.6	33.1
9.0	26.4	47.9	41.2

results. The test specimen number is given in the following way. Taking P-50-0.02, for example, P, 50 and 0.02 imply the type of the bracket, the side length to thickness ratio, L/t, and the maximum initial deflection to thickness ratio, w_0/t, respectively.

Table 5 Specimen numbers and test results

Specimen No.	L/t	W_0/t	P_{max} (ton)	P_{Bmax} (ton)	F'_{Bmax} (ton)
P- 50-0.02	50	0.02	53.0	27.0	10.7
P- 50-1.00	50	1.00	54.1	17.0	8.9
P-100-0.03	100	0.03	51.8	21.5	16.8
P-100-1.11	100	1.11	52.0	18.5	14.5
R- 50-0.07	50	0.07	26.8	23.0	8.4
R- 50-0.41	50	0.41	26.1	18.0	7.9
R-100-0.12	100	0.12	25.9	14.0	12.4
R-100-0.34	100	0.34	25.2	12.8	11.9
F- 50-0.17	50	0.17	24.6	28.0	11.6
F- 50-0.19	50	0.19	26.7	28.0	11.9
F-100-0.25	100	0.25	25.3	17.5	19.5
F-100-0.44	100	0.44	30.9	21.6	21.4
F-100-o.56	100	0.56	29.6	20.8	21.4
F-150-0.03	150	0.03	31.2	20.4	20.1
F-150-0.25	150	0.25	29.6	22.5	23.6
F-150-0.34	150	0.34	30.2	19.4	19.7
D-150-0.03	150	0.03	38.0	28.5	32.3
D-150-0.47	150	0.47	36.8	29.0	33.2

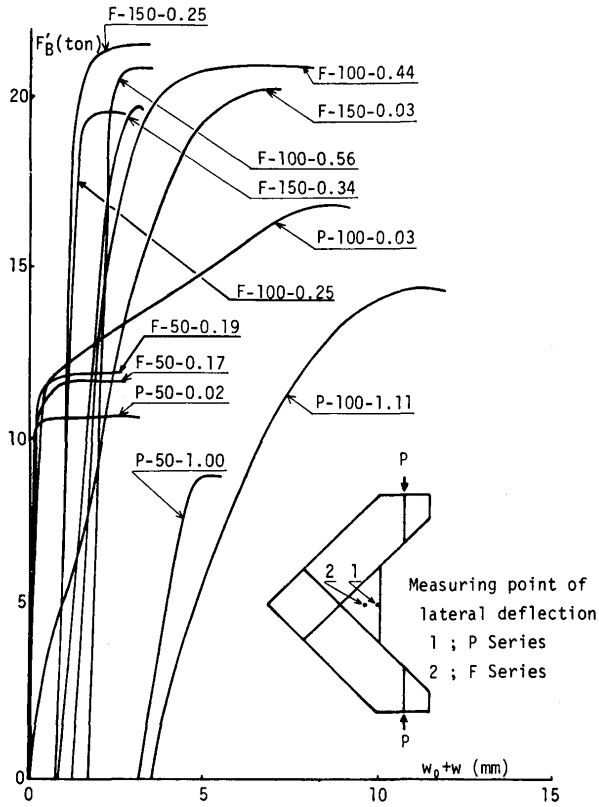

Fig. 9 Bracket force—lateral deflection curves of P and F-Type specimens (Experiment)

3.2 Test procedure and test results

The experiment is carried out at Nagasaki Laboratory of Mitsubishi Heavy Industry, Ltd., using the 100 tons universal testing machine. In the experiment, lateral deflections and strains in one direction perpendicular to the symmetric axis are measured at several points of the bracket. From measured strains in one direction, the force F_B' which the triangular bracket is subjected is calculated using the uni-axis stress-strain relation. The test results are summarized in **Table 5**, where $F_B'_{max}$ is the maximum value of F_B' and $P_{B\,max}$ is the applied load when $F_B'=F_B'_{max}$. The relations between F_B' and lateral deflection of P- and F-Type specimens are plotted in **Fig. 9**.

4. Discussions

4.1 Relation between theoretical and experimental results

First, the results of the theoretical analysis are compared with those obtained by the experiment. **Figure 10** shows the load-lateral deflection curves of P-100 type specimens obtained by both theoretical analysis and experiment. In this figure, broken lines indicate the experimental results, chain lines the results of analysis without welding residual stresses and solid

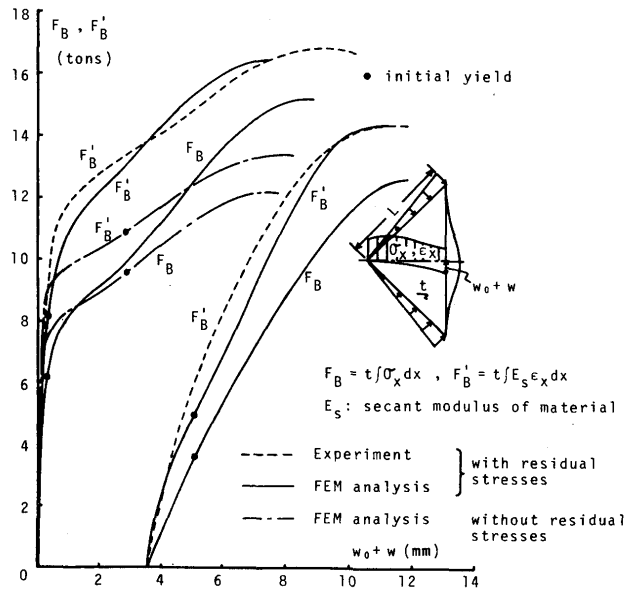

Fig. 10 Comparison of experimental results with FEM analysis (P-100 Type)

lines are those with welding residual stresses. By the theoretical analysis, F_B represents the force acting at the middle section of the bracket, and F_B' is the force which is obtained by the integration of stresses calculated from the analysed strains in one direction in the same way as done for the experimental results. It can be observed from the result of theoretical analysis that F_B' is larger than F_B at the same magnitude of lateral deflection. The result of the theoretical analysis including the effect of the welding residual stresses shows a good agreement with the experimental results. It may be concluded that the theoretical analysis can well describe the actual behavior of the triangular corner bracket.

The theoretical and experimental ultimate strength are summarized in **Fig. 11**. As far as the experimental result is concerned, $F_B'_{max}$ is only a measure to indicate an ultimate strength, but the actual ultimate strength may be somewhat lower than the plotted points judging from the relation between F_B' and F_B obtained by analysis. On the other hand, in the case of F-Type specimens, the ultimate strength by the theoretical analysis is in good agreement with the experimental one, though the welding residual stresses are not considered in the analysis. This agreement may be due to the following reason. In the analyis of the bracket with a stiffener, the stiffener is assumed to be fixed against the lateral deflection at both ends, and this end condition may predict higher ultimate strength of the stiffened bracket than that of the test specimen of which stiffener has a snip end. On the other hand, the ultimate strength of the stiffened bracket obtained by the experiment increases due to the existance of welding residual stresses. Increments in both theoretical and experimental ultimate strength may be regarded to be of the same magnitude, and then a good agreement may be obtained between theoretical and experimental ones.

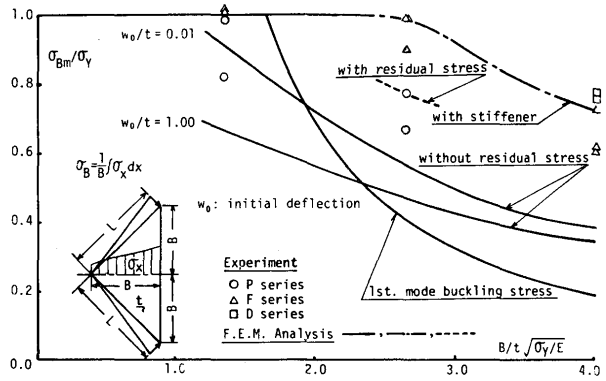

Fig. 11 Ultimate strength of triangular brackets

4.2 Effect of welding residual stresses on the rigidity and strength

(a) Welding residual stresses in the triangular corner bracket

The distribution of welding residual stresses in the triangular corner bracket is quite different from that in plate elements with butt weld or fillet weld in a structure. The residual stresses in the bracket are mostly in tension and not self-balanced in the bracket due to the existence of the main members. This particular distribution is mainly due to the difference in the magnitude of the rigidity between the triangular bracket and main members. Usually, the rigidity of the main members is considerably large as compared with that of the corner bracket, and the main members restrain the thermal deformation of the corner bracket under the influence of heat conduction from the weld metal. The tensile welding residual stresses are produced by this restraint of the thermal deformation besides the thermal shrinkage of the weld metal. The distribution of the welding residual stresses predicted by the theoretical analysis is in good agreement with the measured one in the specimen, except near the right angled corner. This distribution is not identical with, but may be much the same as those in the acual triangular corner brackets.

(b) Effect of welding residual stresses on the rigidity and strength

The rigidity, buckling strength and ultimate strength of structural elements are affected considerably by the existence of welding residual stresses. The influence

of the welding residual stresses is greatly dependent on their distribution and magnitude. In the case of a square plate welded along its opposite two edges, the rigidity and strength decrease due to the welding residual stresses which are in compression at the central part of the plate.[10] However, in the case of triangular corner brackets attatched to the main members by welding, the welding residual stresses are mostly in tension, and these stresses increase the rigidity and strength.

4.3 Effect of initial deflection on the rigidity and strength

The in-plane rigidity of a bracket decreases as the magnitude of initial deflection increases. For example, when $t=3.2$ mm and $L=320$ mm, the initial deflection of $w_0/t=1.0$ reduces the rigidity of the plate about 20% at the beginning of the loading, and about 30% at the ultimate strength comparing with that when $w_0/t=0.01$. The ultimate strength also decreases according to the magnitude of initial deflection. The tendency of decrease in the rigidity and strength become greater as the side length to thickness ratio, L/t, decreases.

4.4 Reinforcement with stiffener

The function of the stiffener attatched along the free edge of the triangular corner bracket is to prevent lateral deflection of the plate and to carry a part of the external load. These functions produce the higher buckling strength and maintain the higher rigidity even after local buckling, and consequently lead to the higher ultimate strength. The experimental values on ultimate strength of F-100 series and F-150 series specimens are somewhat scattering among each series, though the maximum values of initial deflection of each series are almost same. This may be attributed to the difference of the shape of initial deflection.

5. Conclusions

A series of buckling analysis, elastic-plastic large deflection analysis and elastic-plastic thermal stress analysis are conducted for the triangular corner brackets subjected to compression to clarify the effects of initial imperfection (welding residual stresses and initial deflection) due to welding. A series of experiment is also carried out to confirm the results of theoretical analyses. The results obtained are summarized as follows.

(1) Initial deflection decreases the rigidity and ultimate strength of a triangular corner bracket. This decrease is more remarkable when the side length to thickness ratio, L/t, decreases.

(2) The welding residual stresses in the triangular corner bracket is usually in tension, and these stresses increase the buckling strength and the ultimate strength of the bracket.

(3) The buckling strength and the ultimate strength increase due to the stiffener attatched along its free edge.

Acknowledgements

This study was sponsored by the Japan Ship Research Association under the project SR. 127. Authors are thankful to Dr. Fujita, the chairman, and the members of SR. 127, for their valuable discussion. Appreciation is also expressed to Mr. U. Go for his work using computer.

References

1) S. Terao: "Some Experiments on the Strength of Intersection of a Bottom Longitudinal and a Transverse Bulkhead", J. Soc. Naval Arch. Vol. 95 (1954), p. 129. (in Japanese)
2) K. Takahashi, Y. Akita and M. Yokoyama: "Experiment on the Strength of Intersection of Bottom Longitudinals and Transverse Bulkhead", J. Soc. Naval Arch. Vol. 95 (1954), p. 145. (in Japanese)
3) T. Iki and M. Nakashima: "Study on the Buckling Strength of Deck Transverse of VLCC", J. Soc. Naval Arch. Vol. 136 (1974), p. 365 (in Japanese)
4) Y. Ueda and M. Matsuishi: "Elastic-Plastic Analysis of Steel Structures Using the Finite Element Method (3rd Report)—Buckling of Triangular Plate under Various Loading Conditions—", J. Kansai Soc. Naval Arch. No. 131 (1969), p. 27. (in Japanese)
5) M. Mori, M. Matoba, K. Umezaki and M. Hirose: "Application of the Program Fatigue Tests on the Members of Ship Structure", J. Soc. Naval Arch. Vol. 125 (1969). (in Japanese)
6) K. Nishimaki, A. Urata and Y. Hara: "Collapsing Strength of Ordinary Bracket", HITACHI ZOSEN TECHNICAL REVIEW, Vol. 25, No. 1 (1964), p. 1. (in Japanese)
7) K. Nishimaki, Y. Ueda, Y. Hara, K. Enokibara, T. Hori and M. Matsuishi: "On the Local Strength of a Super Tanker (1st Report: Buckling Strength of Web Plates with Slots for Longitudinals)", J. Soc. Naval Arch. Vol. 125 (1969), p. 379. (in Japanese)
8) Y. Ueda, T. Yamakawa and A. Fujiwara: "Analysis of Thermal Elastic-Plastic Large Deflection of Columns and Plates by Finite Element Method", JSSC, 7th Symposium on Matrix Method (1973), p. 411. (in Japanese)
9) Y. Ueda, T. Yamakawa and K. Fukuda: "Analysis of Nonlinear Behavior of Bar and Plate with Temperature Change by Finite Element Method", J. Soc. Naval Arch., Vol. 133 (1973), p. 189. (in Japanese)
10) Y. Ueda, W. Yasukawa, T. Yao, H. Ikegami and R. Ohminami: "Ultimate Strength of Square Plates Subjected to Compression (1st Report)—Effects of Initial Deflection and Welding Residual Stresses—", J. Soc. Naval Arch., Vol. 137 (1975), p. 315. (in Japanese)