Effect of Welding Parameters on the Toughness Characteristics of ESR Weld Metal †

-Toughness distribution of core and rim side in weld metal-

Fukuhisa MATSUDA*, Yasusi KIKUCHI**, Akira HATANAKA***
and Shouichirou FUJIHIRA***

Abstract

Weld metal toughness characteristics was investigated. Impact characteristics of welds by ES process, the absorbed energy of core part of weld metal was found to be remarkably lower than that of its rim (periphery)part.

The effect of ES-welding parameters on the absorbed energy of core and rim side weld metal were investigated.

KEY WORD: (Weld Metal Toughness) (Electro-Slag Welding)

1. Introduction

Nowadays, the automatic box column manufacturing method applies to the fabrication line of steel structures of four side thick plate box column construction for general multistoried buildings, etc.

Both high current submerged arc welding (SAW) and electroslag welding (ES) methods are used in the automatic manufacturing line of box column which aims at the automation of welding.

Extremely higher heat input (Q;kJ/cm) than those used by the conventional automatic welding machines are now used in both SAW and ES welding methods (which is generally called "high heat input welding process" .

The purpose of this report s to clarify the toughness of weld joint made by this high heat input welding process and to improve the toughness produced by this high heat input welding process at the same time.

In the previous joints[1)-3)], the toughness of weld jionts made by the high heat input welding processes such as SAW and ES and the effect of amount of heat input on weld metal (impact characteristic) was clarified.

Furthermore, it was also clarified that there was large difference of toughness characteristic of ES weld metal between the center and the neighboring areas to boundary [hereafter called "Core"(C) and "Rim"(R)].

Now in this report, the relation between the various welding parameters(such as for example, weld heat input(Q), voltage(VE), variation of type of steel,etc.) and the toughness characteristic of ES weld metal at both core and rim parts is discussed.

2. Method of Experiment

2.1 Test material

The test materials used for this experiment are shown in **Table 1**. The test materials are three types of SM490A steels and one type of TMCP steel. They are 50kgf/mm^2 and 40mm thick steel plate and the test pieces of 2PL -300mm W x 600mm L are used for ES welding.

Two types of ES welding wire such as the commercial wire (of 0.2% Mo) and the special wire prepared wire to improve impact value ;of 0.45% Mo) was used. The diameter of theses wire is 1.6fmm and the nozzle of nonconsumable type was used for the elctroslag welding in this test.

2.2 Welding parameter

Various ES welding parameter used in this

† Received on August 4,1993

* Professor
** Associate Professor
*** Co-operate Researcher, KATAYAMA STRA TECHS LTD.

Transactions of JWRI is published by Welding Research Institute, Osaka University, Ibaraki, Osaka 567, Japan

Table 1 Chemical composition materials used

(Wt. %)

Materials or Wire		C	Si	Mn	P	S	Others	EA (Kg-m)
SM 490 A 40mmt	BM2	0.18	0.46	1.45	0.024	0.007	——	5.2
	BM3	0.15	0.34	1.34	0.014	0.004	——	19.1
	BM4	0.15	0.43	1.42	0.011	0.004	——	——
TMCP 40mmt	TM	0.14	0.36	1.22	0.006	0.001	——	24.6
ES Wire (1.6φ)	A	0.06	0.42	1.26	0.006	0.002	0.20%MO	——
	B	0.10	0.01	1.73	0.015	0.008	0.45%MO	——

Table 2 ES welding parameters

Compared item		Parameters varied	Welding condition	Materials used
(1) Weld heat input (Q)		Q=100 ~1267KJ/cm	380A-40~50V V=0.9~9.0 cm/min Q=101~1267KJ/cm	SM490A (BM-4)
(2) ES-voltage (VE)		VE=40,44,46 48,52V	380A-40~52V V=2.4 cm/min Q=380~494 KJ/cm	SM490A (BM-3)
(3) Base Metal or Wire	(a)	Two kinds of BM used	380A-48V-2.4cm/min Q=456 KJ/cm	TMCP and SM490A(BM-3)
	(b)	Two kinds of Wire used	Q=456 KJ/cm	Commercial or special wire
(4) Shielded gas		Ar , Air O_2-gas	Q=456 KJ/cm	SM490A (BM-3)
(5) Flux		YF-15,MF38 MF63 (commercial -base)	Q=456 KJ/cm	SM490A (BM-3)

experiment is shown in **Table 2** The standard parameter for ES welding are 380A -48V-2.4cm/Min. with weld heat input of Q=456J/cm (Flux of YF15 and wire of 55A).

The following welding parameters were varied.

(1) Weld heat input (Q;Six levels in 100 to 1,267kJ/cm)
(2) Welding voltage [VE:Five levels in 40 to 52V [(I=380A constant)]
(3) Type of steel and welding wire(Comparison between BM3 and TMCP steels and between two types of wires with different Mo content)
(4) Shielding and atmospheric gas (O, air and Ar gas)
(5) Type of flux and quantity used

2.3 Impact Test Method

The impact test is generally carried out at 0℃ with 2mm V notch standard Charpy test pieces(10mm square). **Figure 1** shows location of notch, and extrocted position test piece. The range of temperature for the absorption energy transition temperature curve is - 60 to + 100℃.

The effect of direction difference among the test pieces taken on the impact characteristics are also investigated.

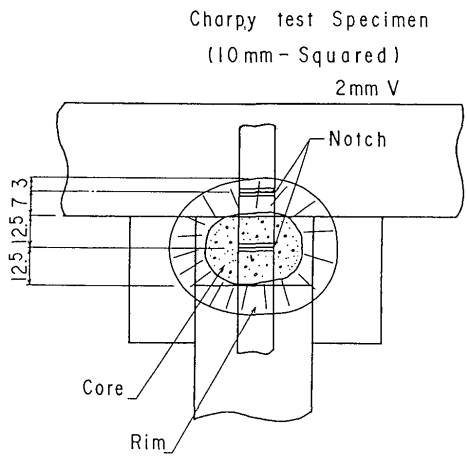

Fig. 1 Locations of notch in ES weld metal

2.4 Analysis of Chemical Composition of Weld Metal

The five elements (C, Si Mn, P and S) with gaseous (O and N) of weld metal were analyzed.

3. Transition Temperature Curve of ES Weld Metal

3.1 Difference between "Core"(C) and "Rim" (R) Parts (BM3 is Used)

Figure 2 shows the comparison of the absorption energy transition temperature curve (T_{rE}) between C and R parts.

Figure 3 shows the macro structure of the section which is greatly different depending on the locations in weld metal and also the example of fracture of impact test piece(with the standard parameter ;Q=456kJ/cm).

It is confirmed that the fracture of impact test pieces clearly show that the EA value at C part is lower than that at R part.

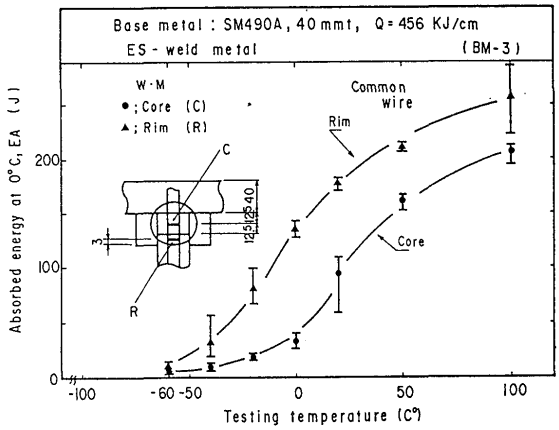

Fig. 2 Energy transition temperature (T_{rE}) curve

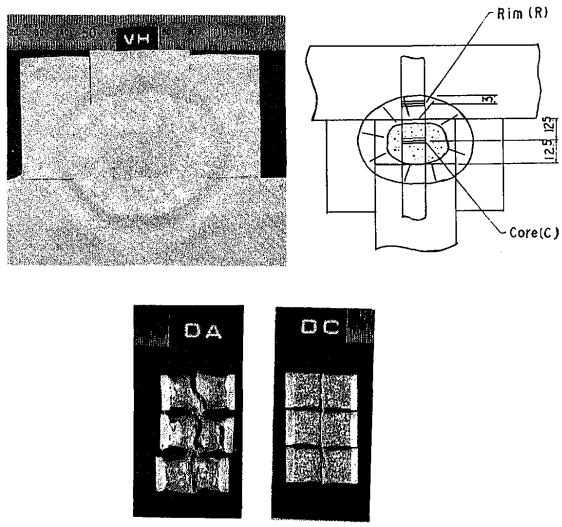

Fig. 3 Example of macro section and fracture of impact test piece in ES weld joint

3.2 Comparison of EA Values between The Different Directions of Test Pieces Taken (BM3 is Used.)

Figure 4 shows the comparison of EA values between the different directions of test pieces taken at both C and R parts. It is found that there are some difference of EA values between two different directions of test pieces taken at both C and R parts.

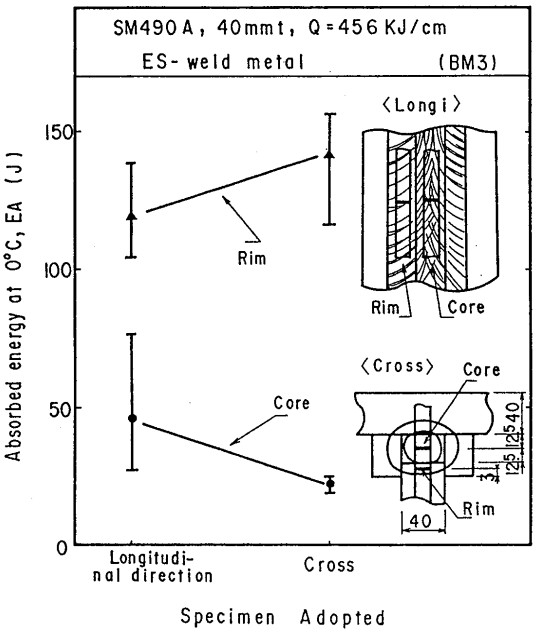

Fig. 4 Comparison of EA values between two directions of test pieces taken

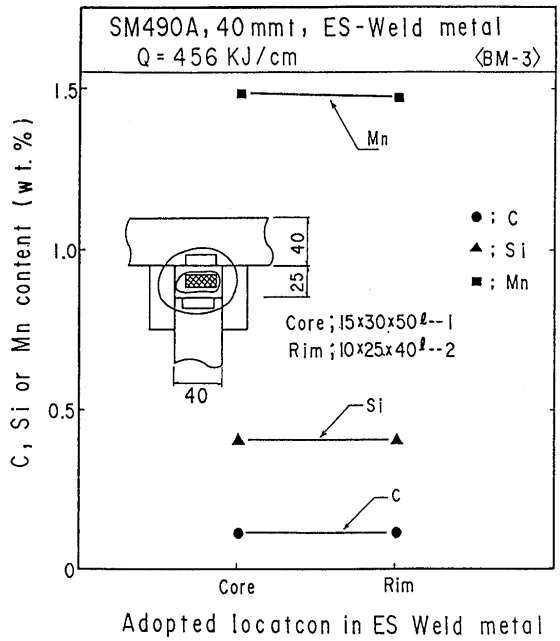

Fig. 5 Comparison of C, Si, and Mn compositions

The EA value of the test piece taken crosswise (at right angle tow weld seam) is a little lower than that of the test piece taken longitudinally at C part.
On the other hand, the EA value of the test piece taken longitudinally is lower than that of the test piece taken crosswise.

These differences of EA values between the different directions of test pieces taken at both C and R parts seem to be caused by the difference of growth direction of solidifying crystals.

Figure 5 and **Figure 6** show the analytical results of chemical compositions of elements and gases at both C and R parts in ES weld metal(with standard parameter ;Q=456 kJ/cm). There is no special difference of content of main five element and gases.

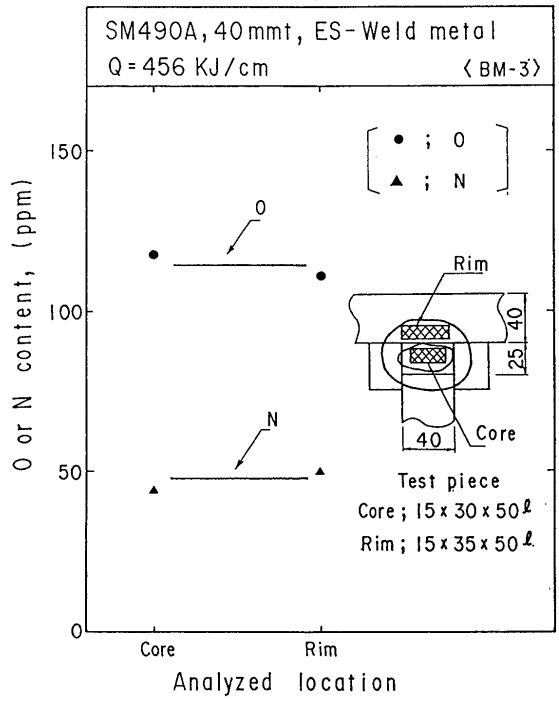

Fig. 6 Comparison of O and N contents

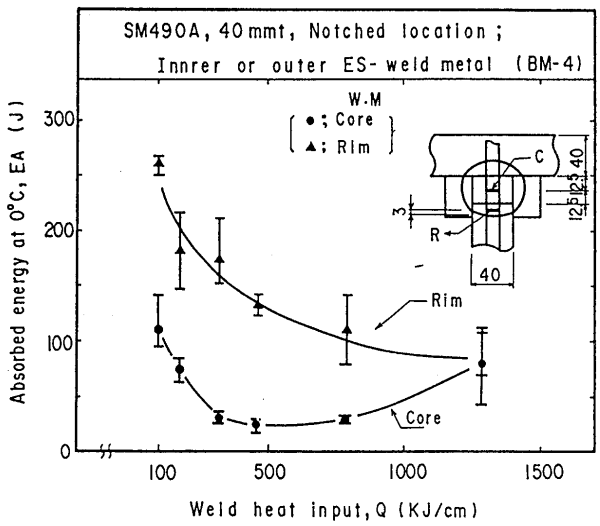

Fig. 7 Effect of Q on EA

4. Relation between Weld Parameters and Impact Characteristic

4.1 Effect of Weld Heat Input(Q) (Both BM 3 and 4 are Used.)

Figure 7 shows the effect of Q on EA at both C and R parts.

Generally , C part clearly shows the lower EA value than that at R part. EA value at both C and R parts decreases according to the increase of Q. However, both C and R parts show about the same EA value in the case of the maximum Q= 1,267 kJ/cm.

Figure 8 shows the change of gas content at C apart of weld metal for the case of both maximum and minimum Q.

Although nitrogen gas (N) content does not change and is stable regardless of the change of Q but oxygen

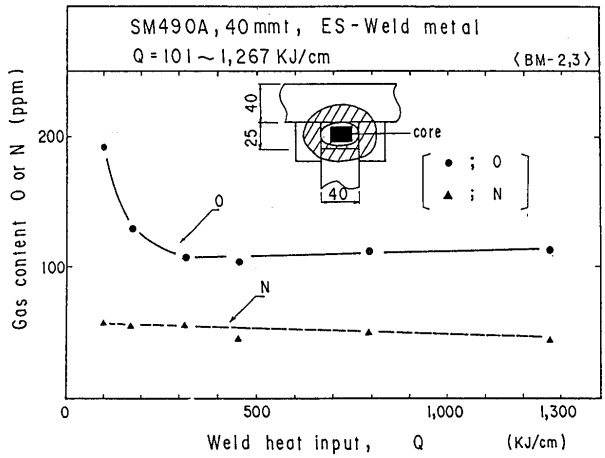

Fig. 8 Change of gas content according to the increase of Q

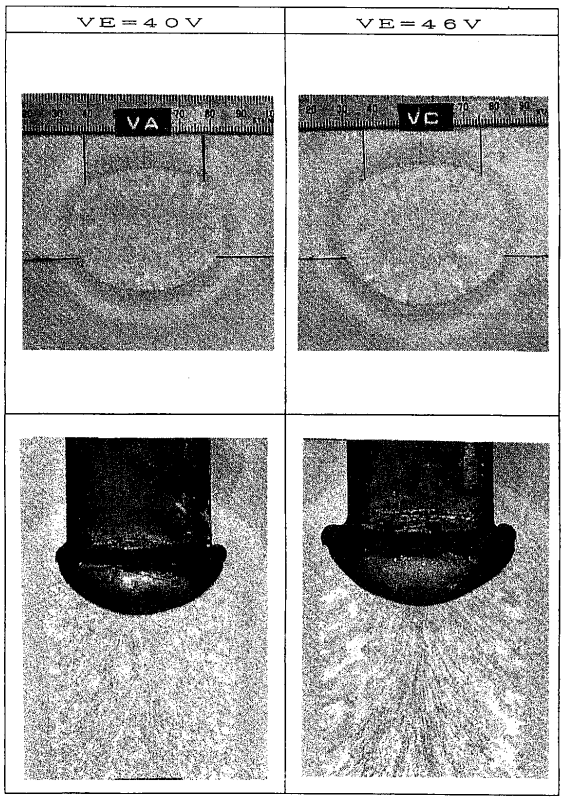

Fig. 9 Weld macro section welded by different VE

shows its high content at the minimum heat input of Q=101 kJ/cm).

4.2 Effect of Welding Voltage (VE)

Figure 9 shows the example of weld macro sections

both horizontal and vertical sections of molten pool) welded by the different VE. This is the example different VE=40 and 46 V with the same current of 1=380A.

Figure 10 shows the relation between EA and welding voltage VE

The tendency of a little EA decrease according to the increase of VE at C part is noticed. On the other hand, the EA value at R part does not show a significant change.

Figure 11 shows the change of C content is ES weld metal (at C part) according to the increase of VE. There is no significant change C content in weld metal regardless of the increase of VE.

Figure 12 shows the example of change of molten ratio of base metal (RB) according to the increase of VE.

With the increase of VE, RB has the tendency to also increase so that more base metal compositions are

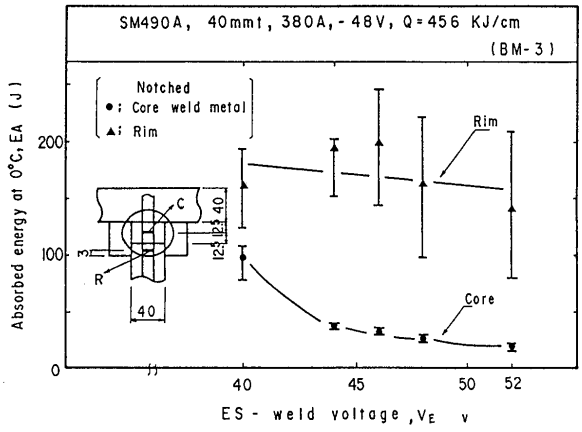

Fig. 10 EA change according to the increase of VE

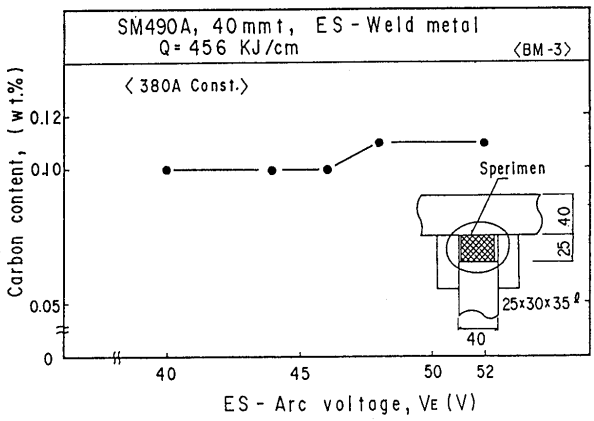

Fig. 11 Change of C content according to the increase of VE

molten into weld metal and some increase of C content has been expected.

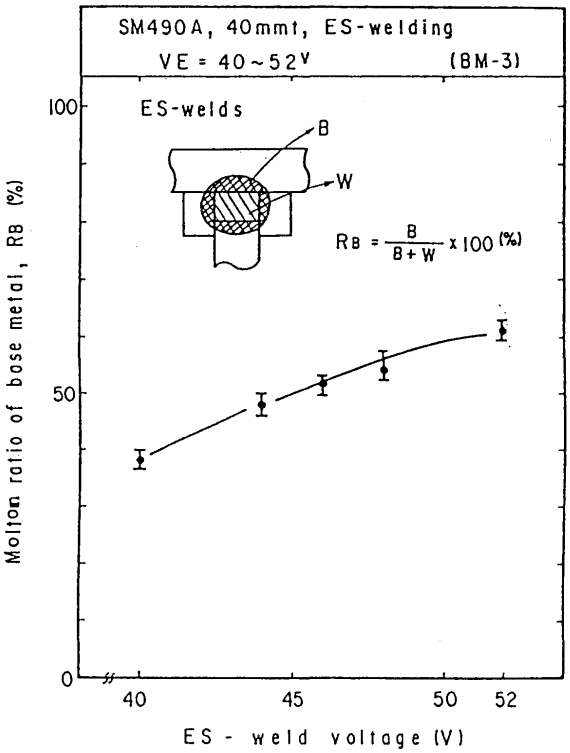

Fig. 12 Change of RB according to the increase of VE

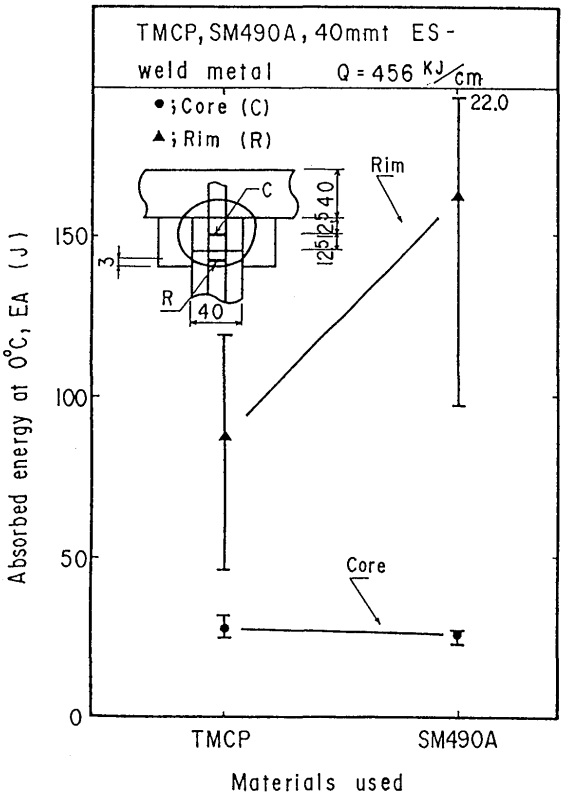

Fig. 13 Comparison of EA values between different types of steel

4.3 Effect of Type of Steel and Wire (Both BM3 and TMCP Steels are Used).

Figure 13 shows EA values of ES weld metal (Q=456 kJ/cm) as a function of type of steel C part generally shows low EA values which are not significantly affected by the difference of TMCP and SM 490-A

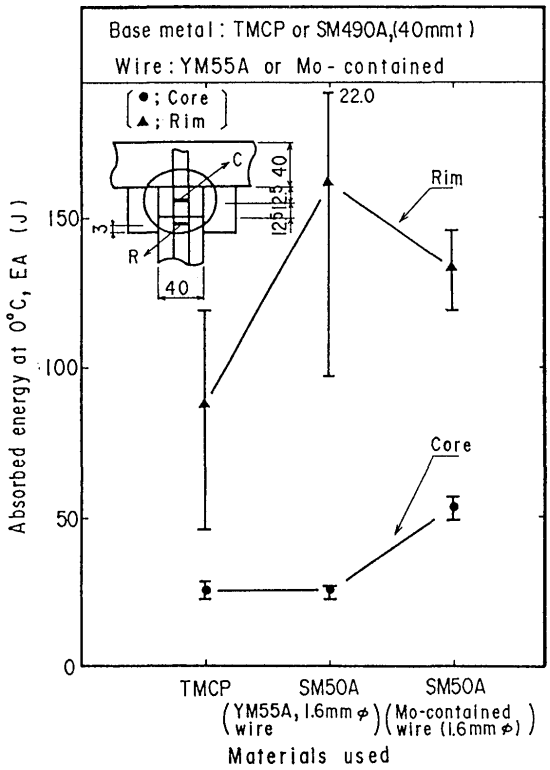

Fig. 14 Comparison of EA values among different types of steel and wire at both C and R parts

Figure 14 shows the comparison of EA values among different types of steel and wire at both C and R parts. Some improvement of EA value at C part with the wire including Mo (at the test temperature of 0℃) is noticed .

Furthermore, R part always shows higher EA values than those at C parts.

4.4 Effect of Shielding Gas Compositions (BM3 is used).

Figure 15 shows the comparison of EA values of weld metal at C part as function of different shielding gas (in flow rate of 25 1/Min.). The EA value in the case that Ar gas is used , is higher than those in other shielding gases.

Figure 16 shows the analytical results of O or N content in weld metal(at C part) with different shielding gases. The significant change of O content in weld metal depending on the type of shielding gas is noticed.

Figure 17 shows the change of EA as function of O content in weld metal.

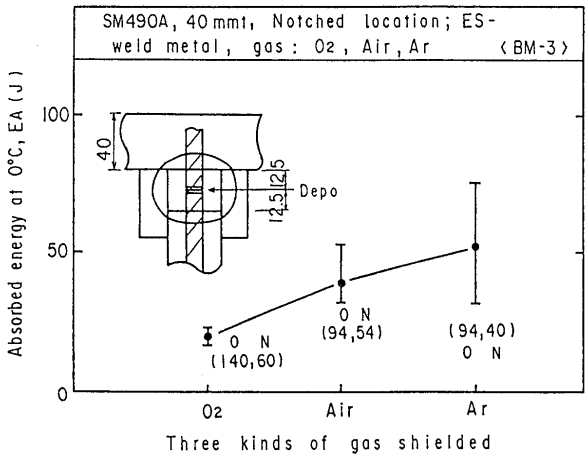

Fig. 15 Comparison of EA values among different shielding and atmospheric gases

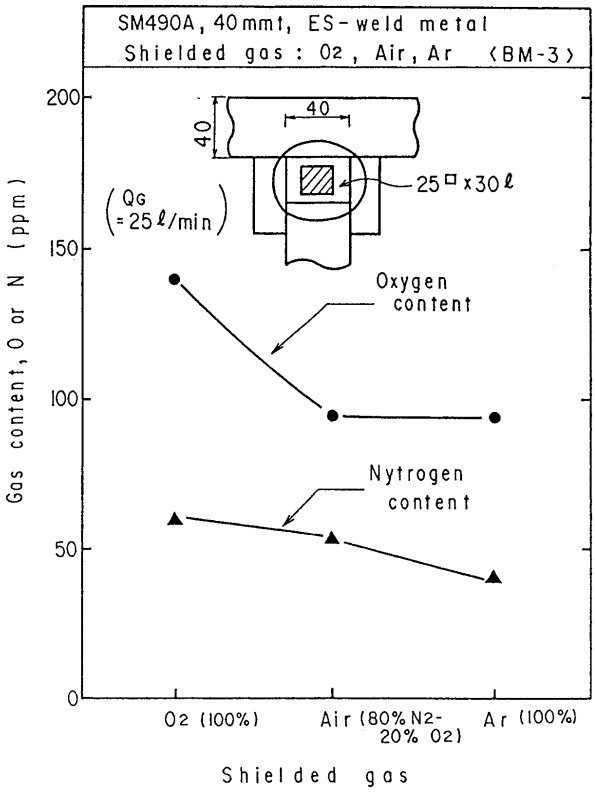

Fig. 16 Comparison of O and N contents with different shielding and atmospheric gases

4.5 Effect of flux

4.5.1 Type of flux(BM2 is used).

Figure 18 shows the change of EA value (of weld metal at C part) for the different type of fluxes. Two types of commercial flux for 50kg/mm^2 and for 60kg/mm^2 class steel were tested respectively.All of them are fused type. It is found that so far as this test is concerned, the EA value of weld metal part is not specially affected by the change of fluxes.

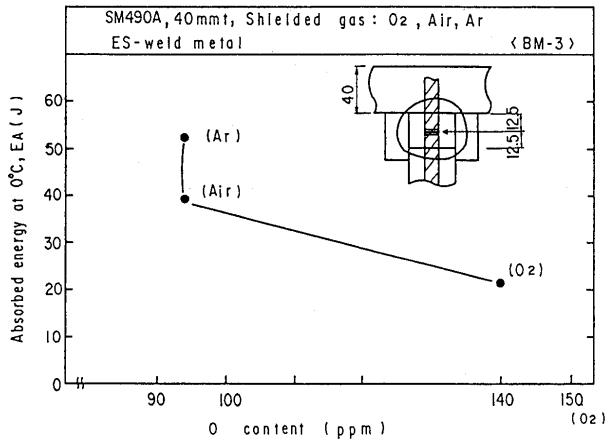

Fig. 17 Change of EA value according to the increases of O content

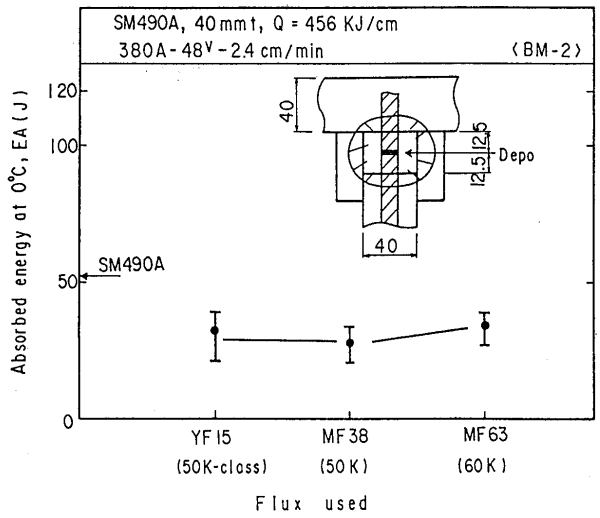

Fig. 18 The change of EA for different types of flux

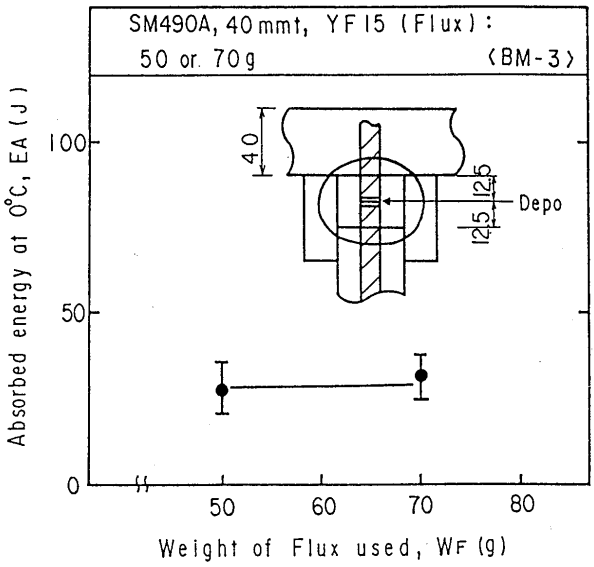

Fig. 19 Change of EA values according to the increase of amount of flux supplied

4.5.2 Amount of flux supplied (BM3 is used).

Figure 19 shows comparison of EA values according to the increase of flux (W_F) to be supplied.

Figure 20 shows the example of macro sections with the change of amount of flux. The EA values of weld metal at C part are not specially affected by the change of amount of flux (50g or 70g) to be supplied.

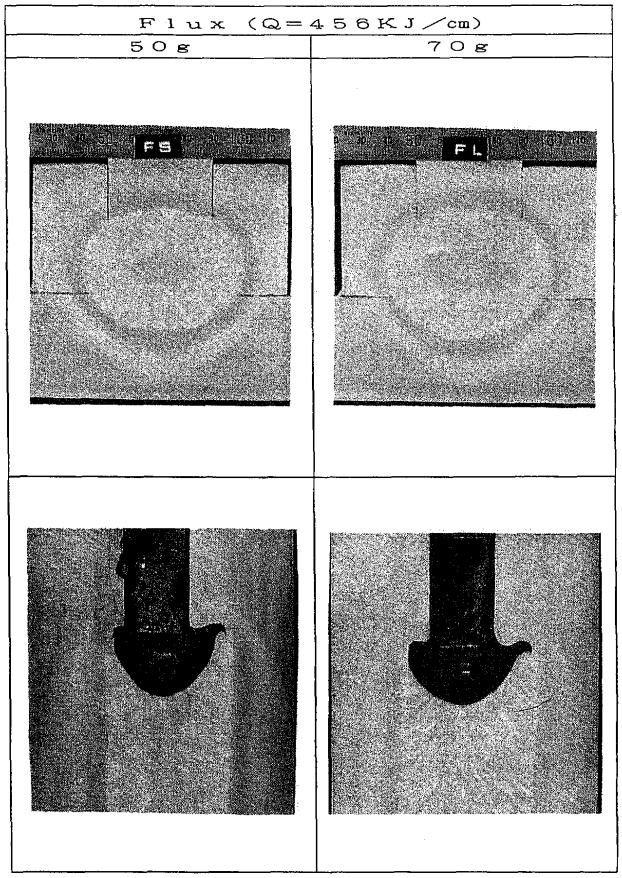

Fig. 20 Macro sections with the change of amount of flux

5. Study of SEM observation on fracture surface of impact test piece

Figure 21 shows the example of scanning electron microscopic(SEM) examination results (X200) of impact test piece fracture of ES weld metal at both C and R pars with standard parameter (Q=456 kJ/cm).

Figure 22 shows the example of fracture surface (X1,000) of weld metal at both R and C parts. The EA values of C and R parts are 25 and 130J, respectively.
It is confirmed in both Fig. 21, 22 that the facet size (unit of fracture) in C part is clearly larger than that in R part. The facet size in C part and R part, is in the order of 50 to 100m and a few 10 m (less than 50 m), respectively.

It is generally said that the facet size is closely related with the absorption energy(EA). The difference

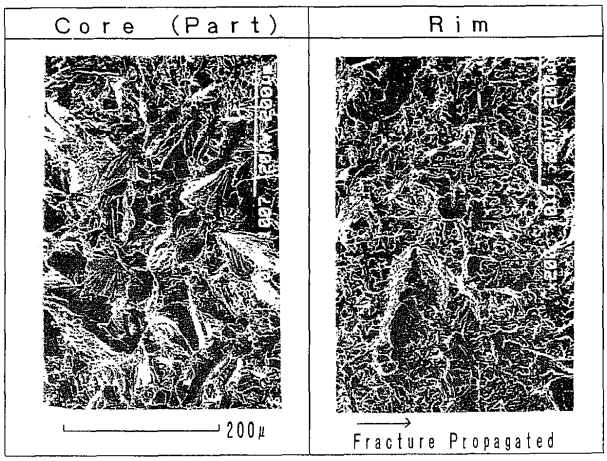

Fig. 21 Impact test piece fracture of weld metal

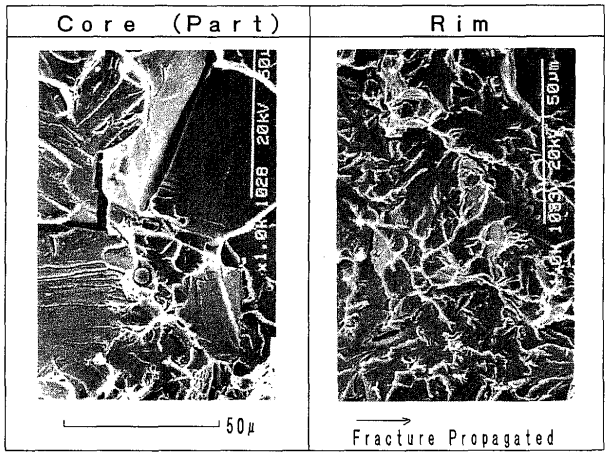

Fig. 22 Magnification of impact test piece fracture (x1000)

of EA value between C and R parts could also be expected from the check results of facet size in the fracture examined by SEM.

Furthermore, the generation of the secondary crack of significant degree of embrittlement has been found in C part fracture.

6. Summary

The impact characteristics of weld metal by electroslag welding process has been clarified.

Especially the impact characteristics of weld metal at the center [Core (c)] and the neighboring near to the boundary [Rim (R)] had been discussed in this report.

The following is the main summary of the results obtained.

(1) I t is found that regarding the EA at C and R parts the EA value at the former is lower than that at the latter with higher energy transition temperature.

(2) It is confirmed that in the case of the EA of weld

metal at C part of which toughness significantly drops, the test piece taken along the weld seam line shows a little higher EA than the of the test piece taken in usual direction(which is taken crosswise).

(3) There is no significant difference noticed of the chemical compositions of five main elements and gases (O and N) between C and R parts in the same welds metal.

(4) The EA value of weld metal at both C and R parts shows a tendency to decreases according to the increase of weld heat in put(of Q=101 to 1, 267 kJ/cm in six levels)

(5) The EA of weld metal at C part shows a tendency to decrease according to the increase of welding voltage(VE=40 to 52 V in five levels)

(6) There is a significant difference noticed of facet size (unit of fracture) between C and R parts as the result of examination of impact fracture with a scanning type electron microscope. The facet size at C part is larger than that at R part which exactly corresponds to the low EA value at C part.

By this report , the relation between the impact characteristics of weld metal(especially at C and R parts) and various welding parameters is clarified. In future , the toughness of weld metal at C part (Core part of weld metal) will be improved to clarify the difference of toughness of weld metal between C and R parts by the analysis of micro structure.

References

1) Hatanaka, Fujihira and Matsuda; "Fundamental Research on Toughness Characteristics of Weld Metal Produced by High Heat Input Process", Katayama Technical Report, (1991) No.11,23-30

2) S. Fujihira, A. Hatanka, Y. Kikuchi and F. Matsuda, "An investigation of Toughness Characteristics of Weld Metal of 50 kg/mm^2 Class Constructional Steels by High Heat Input Electro-Slag Welding Process" Pacrim Weld '92-DARWIN, Transferring Technology & Knowhow paper, No. 26, July (1992)

3) F. Matsuda, Y.Kikuchi, S. Fujihira and A. Hatanaka :"MIcrostructure and Toughness of High Heat Input Electro-slag Weld Metal of 50kgf/mm^2 Class Constructional Steels" Trans. JWRI Vol. 21(1992) No.2, 233-239