Osaka University Knowledge Archive

| | |
|---|---|
| Title | Computational Analysis of Charpy Impact Tests Using Interface Elements(Mechanics, Strength & Structure Design) |
| Author(s) | Serizawa, Hisashi; Wu, Zhengqi; Murakawa, Hidekazu |
| Citation | Transactions of JWRI. 2001, 30(2), p. 97-102 |
| Version Type | VoR |
| URL | https://doi.org/10.18910/9070 |
| rights | |
| Note | |

*Osaka University Knowledge Archive : OUKA*

https://ir.library.osaka-u.ac.jp/

Osaka University

# Computational Analysis of Charpy Impact Tests Using Interface Elements †

Hisashi SERIZAWA*, Zhengqi WU** and Hidekazu MURAKAWA***

**Abstract**

*In order to analyze dynamic crack growth in the Charpy impact test accurately, a new computer simulation method using the interface element was developed and dynamic fracture behavior in the sharp and round V-notch Charpy tests of steel was analyzed using the proposed method. It was demonstrated that the Charpy test could be qualitatively simulated. In the case of the sharp notch Charpy test, the temperature effect on the dynamic crack propagation process was found to be primarily attributed to the surface energy of the crack, not to the yield stress ratio, which represents the bulk property. In case of the round notch Charpy test, the significant effect of the notch tip geometry on crack initiation was observed in the computation..*

**KEY WORDS:** (Charpy Impact Test) (Dynamic Fracture Behavior) (Finite Element Method) (Interface Element) (Surface Energy) (Yield Stress Ratio)

## 1. Introduction

The Charpy impact tests are widely applied to materials in order to examine their mechanical properties, which are, for example, dynamic fracture strength, ductile-to-brittle transition temperature and dynamic fracture toughness. Many computational methods to simulate dynamic fracture behavior in the Charpy test have been proposed, and most of them are macroscopic approaches, in which the concepts of stress intensity factor, energy release rate and J-integral are employed. To analyze dynamic crack growth in the Charpy test accurately, however, not only the macroscopic but also the microscopic nature of the phenomena must be taken into account. In other words, it is important to model the problem from the aspect of both the formation of a crack surface and the deformation of the materials as bulk.

Recently, a computer simulation method has been developed in order to simulate fracture phenomena that can be considered as the formation of a new surface with the crack propagation[1]. Based on the fact that surface energy must be supplied for the formation of a new surface, a potential function representing the density of surface energy is introduced in the proposed finite element method using interface elements. In this study, the proposed method was applied to the dynamic fracture behavior in the sharp V-notch Charpy test of steel. From the comparison with experimental results, the effect of temperature on the surface energy in the potential function of interface element was examined. The dynamic fracture phenomena in the round V-notch Charpy tests of steel were also analyzed and compared with the results of the sharp notch test.

## 2. Interface Element

Essentially, the interface element is the distributed nonlinear spring existing between surfaces forming the interface or the potential crack surfaces as shown by **Fig.1**. The interaction between the surfaces is assumed to be defined through the interface potential per unit area $\phi$ and the Lennard-Jones type function is selected as the potential function, i.e.,

$$\phi(\delta) = 2\gamma \cdot \left\{ \left( \frac{r_0}{r_0 + \delta} \right)^{2N} - 2 \cdot \left( \frac{r_0}{r_0 + \delta} \right)^{N} \right\}, \qquad (1)$$

where, $\delta$ is the opening displacement. The parameters $\gamma$, $r_0$, and $N$ are the surface energy per unit area, the scale parameter and the shape parameter of the potential function. The derivative of the potential $\phi$ with respect to the opening displacement $\delta$ gives the stress acting between the surfaces. As shown in **Fig.2**, the stress $\sigma$ increases with the increase of the opening displacement

† Received on November 30, 2001
* Research Associate
** Dynus Co.. Ltd.
*** Professor

Transactions of JWRI is published by Joining and Welding Research Institute of Osaka University, Ibaraki, Osaka 567-0047, Japan.

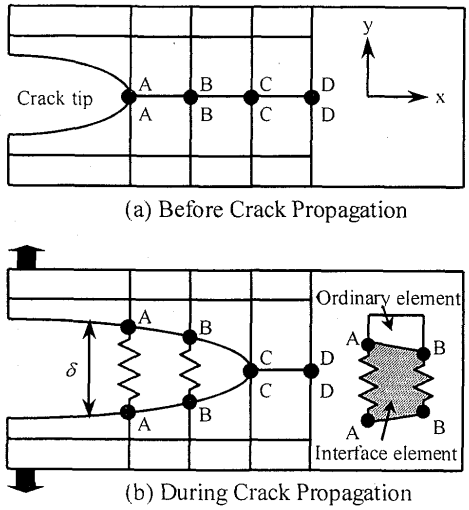


**Fig.1** Representation of crack propagation using interface element.

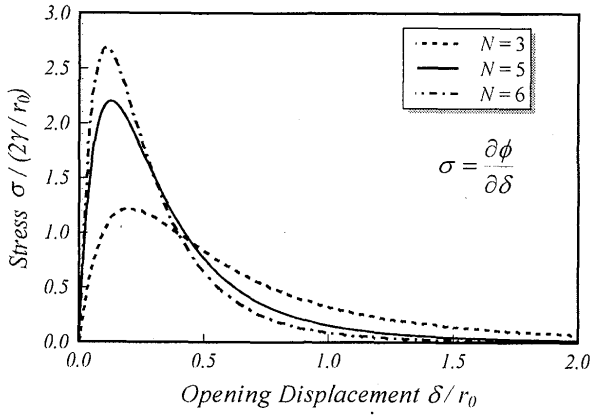


**Fig.2** Relation between crack opening displacement and bonding stress.

and reaches its maximum value $\sigma_{cr}$ when $\partial \phi / \partial \delta = 0$. With a further increase of the opening displacement, the stress rapidly decreases and the interaction between the surfaces is lost.

$$\sigma_{cr} = \frac{4\gamma N}{r_0}\left\{\left(\frac{N+1}{2N+1}\right)^{\frac{N+1}{N}} - \left(\frac{N+1}{2N+1}\right)^{\frac{2N+1}{N}}\right\} \tag{2}$$

As is seen from the above equation, the maximum stress $\sigma_{cr}$ is proportional to the surface energy $\gamma$ and inversely proportional to the scale parameter $r_0$.

By arranging such interface elements along the crack propagation path as shown in Fig.1, the growth of the crack under the applied load can be analyzed in a natural manner. In this case, a decision on the crack growth based on the comparison between the driving force and the resistance as in the conventional methods is not necessary.

## 3. Influence of Parameters

Among the three parameters involved in the interface energy function, only the surface potential $\gamma$ has

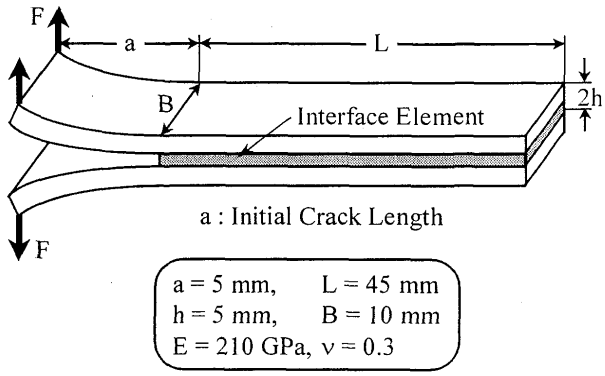


**Fig.3** Peeling of bonded elastic strips.

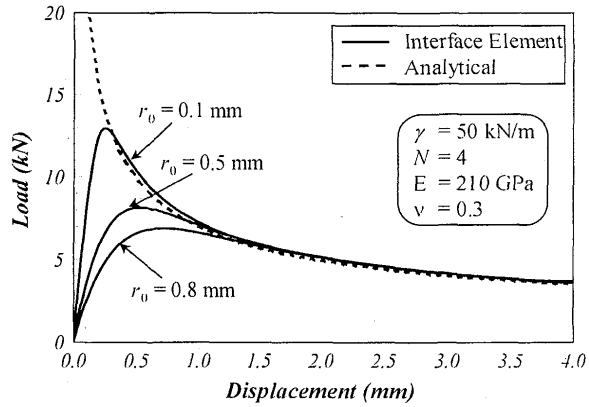


**Fig.4** Effect of scale parameter $r_0$ on load-displacement curves.

the clear physical meaning. While those of the scale parameter $r_0$ and the shape parameter $N$ are not very clear. To clarify the influence of these parameters on the numerical results of failure problems, the peeling of two bonded elastic strips shown in **Fig.3** was analyzed as a simple model. The process of the peeling test was examined for different values of the scale parameter $r_0$, keeping the surface energy $\gamma$ constant. The computed load-displacement curves are shown in **Fig.4**. The peak point of the curve corresponded to the start of peeling and the load decreased with increasing peeling length. As seen from Fig.4, the scale parameter $r_0$ had some influence on the start of the peeling but it had almost no influence on the peeling process. Though it is not shown here, the shape parameter $N$ and the mesh division had no influence on the peeling process and the process was mainly governed by the surface energy $\gamma$[1]. For the quantitative assessment of the proposed interface element, the analytical solution is also plotted in the figure. The analytical solution of present problem is given by the following equation.

$$F = \left(\frac{2EB^4h^3\gamma^3}{27}\right)^{\frac{1}{4}} \frac{1}{\sqrt{\delta}}, \tag{3}$$

where, $E$, $B$, $h$ are the Young's modulus, the breadth and the thickness of the strip, respectively. Good agreement

**Table 1** Mechanical properties used in FEM model.

| Specimen | | | | | |
|---|---|---|---|---|---|
| Young's Modulus $E$ | Poisson's Ratio $\nu$ | Density $\rho$ | Initial Yield Stress $\sigma_{Y0}$ | Hardening Exponent $n$ | Hardening Coefficient $\alpha$ |
| 210 GPa | 0.3 | 7.85 Mg/m$^3$ | 280 MPa | 0.3 | 115.0 |

| Interface Element | | | | |
|---|---|---|---|---|
| | Surface Energy $\gamma$ | Scale Parameter $r_0$ | Shape Parameter $N$ | Maximum Stress $\sigma_{cr}$ |
| Interface Element-1 | 60 kN/m | 0.05 | 3 | 2926 MPa |
| Interface Element-2 | 0.25 N/m | 0.05 | 3 | 0.0122 MPa |

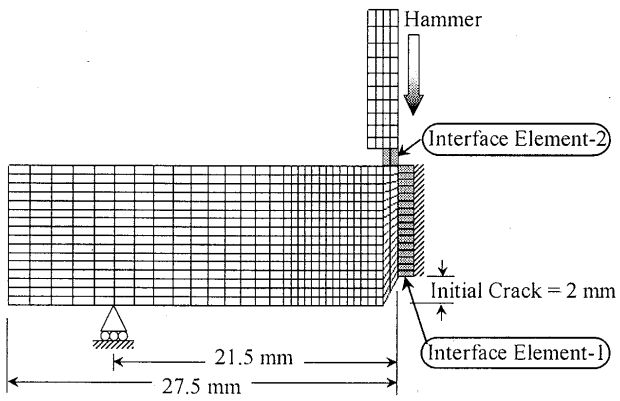


**Fig.5** Schematic illustration of FEM model.

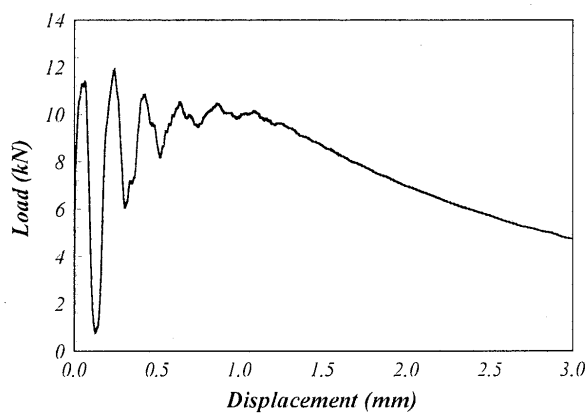


**Fig.6** Computed load-displacement curve of sharp V-notch Charpy test.

with the analytical solution proves the capability of the proposed method for quantitative prediction.

## 4. Model for Analysis

Aihara and Okamoto reported the experimental results of instrumented pre-cracked Charpy and 2mm-V Charpy impact tests of steel in various temperatures[2]. In case of the 2mm-V Charpy test, the initiation of the brittle crack could be detected as the abrupt load drop. It was reported that the brittle crack initiation was delayed by an increase of test temperature. On the other hand, the initiation for the pre-cracked Charpy test did not change considerably with temperature, although the load and the fracture energy after the brittle fracture initiation decreased with decreasing test temperature.

Since our ongoing research indicates that the stress singularity of the crack tip in the pre-cracked Charpy test is almost the same as that of the notch tip in a sharp V-notch Charpy test, the finite element method (FEM) model shown in **Fig.5** was employed to compare with the experimental results of the pre-cracked Chary test. Where the specimen size was 10 x 10 x 55 mm$^3$ and the weight of the hammer and the impact velocity were 40 kg and 5.4 m/s, respectively. Because of the symmetry of the problem, only one quarter of the specimen was modeled using three-dimensional isoparametric elements and the two types of interface elements. The interface elements were arranged along the crack path (Interface Element-1) and between the specimen and the hammer (Interface Element-2). The specimen was assumed to be an elastic - plastic isotropic hardening material where the strain rate effect was ignored and the yield stress $\sigma_Y$ was assumed to be given by the following strain hardening rule.

$$\sigma_Y = \sigma_{Y0}\left(1+\alpha\cdot\varepsilon^{P}\right)^{n} \tag{4}$$

Where $\sigma_{Y0}$, $\varepsilon^{P}$, $n$ and $\alpha$ are the initial yield stress, the equivalent plastic strain, the hardening exponent and the hardening coefficient, respectively. The mechanical properties of specimen and two types of the interface elements are shown in **Table 1**.

## 5. Computational Result of Pre-Cracked Charpy Impact Test

**Figure 6** shows the computed load-displacement curve at the impact point of the sharp V-notch Charpy impact specimen. Although the load fluctuated at displacements lower than 0.5 mm, this fluctuation of load disappeared at larger displacements. The crack opening deformations and the stress distributions in the

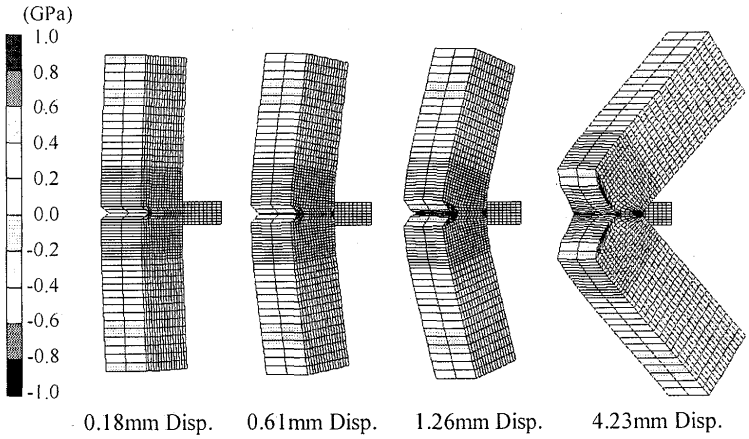


**Fig.7** Crack opening deformations and stress distributions in specimen.

specimen are shown in **Fig.7**. Significant propagation of the crack was not observed until the displacement reached 0.18 mm. When the displacement was 0.61 mm, the crack was slightly extended. So the reason for the initial large fluctuation of load is considered to be the elastic vibration of specimen, and the plastic deformation of the specimen seems to work as a damping of the vibration at larger displacements. Moreover, the calculated curve agreed with the experimental result qualitatively. These indicate that the proposed method using the interface element would have the potential capability to analyze the dynamic fracture behavior of the Charpy impact test.

As described in the previous section, the experimental load-time curve, which is almost the same as load-displacement curve, is greatly influenced by the test temperature. In general, the mechanical properties of materials are affected by the temperature. In this research, the mechanical properties were modeled by both the ordinary finite element and the interface element, to represent the properties of the bulk and the surface, respectively. So the effect of temperature on the Charpy test was studied by separating the factors into those of the bulk and the surface.

## 6. Effect of Surface Energy of Interface Element

In the experimental results of pre-cracked Charpy tests, the effect of the test temperature on the crack propagation process after the brittle fracture initiation was very large. Among the three parameters involved in the interface potential function, only the surface energy $\gamma$ affects the peeling process of two bonded elastic strips. So the effect of surface energy on the sharp V-notch Charpy test was examined by controlling the surface energy under the condition that the maximum bonding stress $\sigma_{cr}$ of the interface element was constant, namely by changing both the parameter $\gamma$ and $r_0$ in the same ratio according to Eq.(2). The computed load-displacement

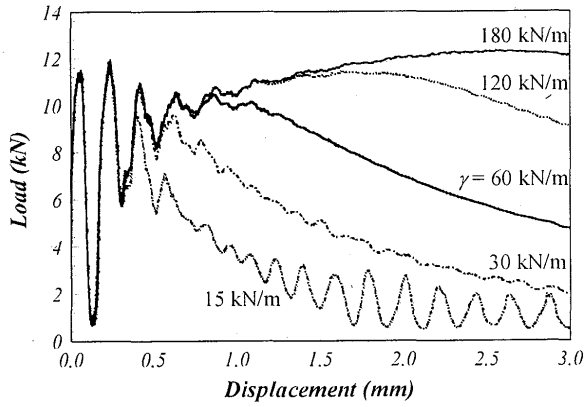


**Fig.8** Effect of crack surface energy on sharp V-notch Charpy test.

curves in the various surface energies were plotted in **Fig.8**. Although the maximum loads, which might indicate the brittle fracture initiation, were the same in all cases, the loads in the crack propagation process decreased with decreasing surface energy. These results agree with the experimental result, so the changes in the load history and the energy absorption after the brittle fracture initiation seem to be caused by a decrease in the surface energy of the crack with decreasing test temperature.

## 7. Effect of Yield Stress Ratio of Steel

The yield stress $\sigma_Y$ and tensile strength $\sigma_T$ of steel show an Arrhenius type relationship to the temperature, where the temperature dependency of $\sigma_Y$ is reported to be larger than that of $\sigma_T$. From the definition of $\sigma_Y$, the tensile strength can be obtained as follows,

$$\sigma_T = \sigma_{Y0} \cdot (n\alpha)^n \cdot e^{\frac{1-n\alpha}{\alpha}} . \tag{5}$$

Among various mechanical properties characterizing the bulk, the effect of yield stress ratio ($\sigma_{Y0}/\sigma_T$) on the Charpy test was examined. **Figure 9** shows the load-displacement curves for cases with various yield stress ratios, where the original was the case that $\sigma_{Y0}/\sigma_T$ =

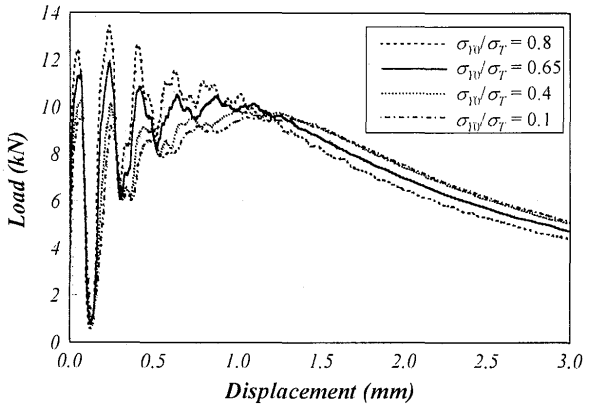


**Fig.9** Effect of yield stress ratio on sharp V-notch Charpy test.

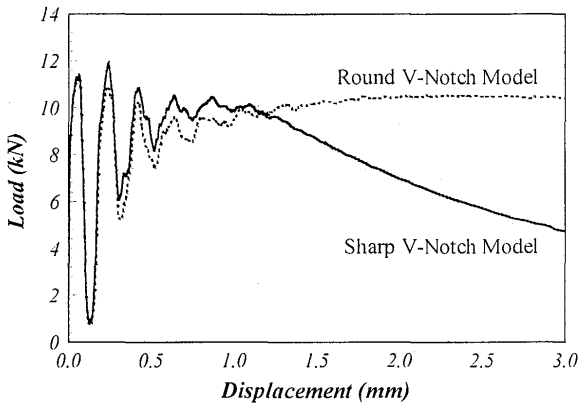


**Fig.10** Effect of shape of notch tip on load-displacement curve.

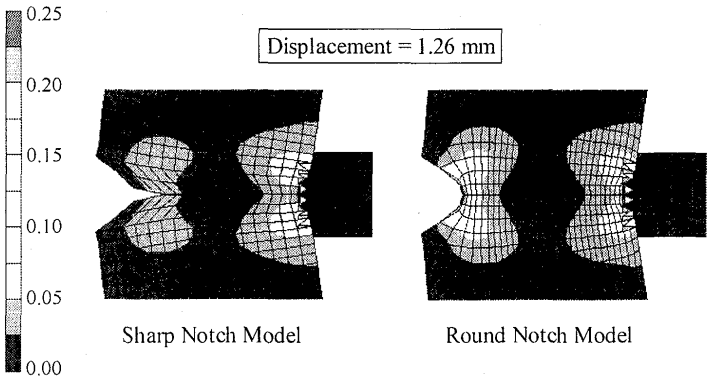


**Fig.11** Deformations and distributions of equivalent plastic strain.

0.65. Unlike the results of the surface energy effects, the maximum loads increased with increasing yield stress ratio. On the other hand, the crack propagation processes were almost independent of the yield stress ratio. Thus, it may be surmised that the effect of test temperature on pre-cracked Charpy impact tests seems to result not from the yield stress ratio of the bulk but from the surface energy of the crack.

## 8. Effect of Shape of Notch Tip

To understand the difference between the pre-cracked Charpy test and the V-notch Charpy test, the effect of the shape of the notch tip was studied. The shape of the experimental V-notch was precisely modeled, where the depth of notch, the angle of notch and the radius of curvature at the notch tip were 2 mm, 45 degrees and 0.25 mm, respectively. This model is termed a round V-notch model. The load-displacement curve of this model was compared with the sharp notch model as shown in **Fig.10**. The load of the sharp notch model gradually decreased at displacements larger than 1.2 mm. The load of the round notch model, however, kept almost the same value until the displacement reached 3.0 mm. Qualitatively, this agrees with the experimental results of 2mm V-notch Charpy tests. **Figure 11** shows the deformations and the distributions of equivalent plastic strain for both sharp and round V-notch models when the displacement was 1.26 mm. Although the crack propagated to about half of the specimen width in the sharp notch model, the crack seems to be arrested by the concentration of plastic strain near the round notch tip. Then the proposed method might be used for analyzing the effect of the shape of the notch tip on the crack initiation and propagation behavior.

## 9. Conclusions

In order to analyze the dynamic crack growth in the Charpy impact test accurately, a computer simulation method using the interface element was developed and the dynamic fracture behavior in the sharp and round V-notch Charpy tests of steel was analyzed using the proposed method. The conclusions can be summarized as follows.

(1) By using the proposed method with the interface element, the Charpy tests could be qualitatively simulated.

(2) In the case of the sharp V-notch Charpy test, the temperature effect appeared primarily through the surface energy of the crack while the influence of the yield stress ratio, representing the bulk property, was small.

(3) In case of the round V-notch Charpy test, the initiation of the crack propagation was strongly influenced by the shape of the notch tip. When the notch tip had a smooth circular geometry, the initiation of crack was significantly delayed.

## References

1) Z. Q. Wu, H. Serizawa and H. Murakawa. Key Engineering Materials 166, (1999) 25-32.

2) S. Aihara and K. Okamoto, Proceedings of the Fourth International Offshore and Polar Engineering Conference. (1994) 198-205.